Bucknell University
Bucknell Digital Commons

Honors Theses | Student Theses

2010

Investigation of the Design of a Bistable Micro-Chemical-Mechanical Device Utilizing Lateral Buckling

Susan Lyn Barnes
Bucknell University

Follow this and additional works at: https://digitalcommons.bucknell.edu/honors_theses

Part of the Mechanical Engineering Commons

Recommended Citation
Barnes, Susan Lyn, "Investigation of the Design of a Bistable Micro-Chemical-Mechanical Device Utilizing Lateral Buckling" (2010). *Honors Theses*. 7.
https://digitalcommons.bucknell.edu/honors_theses/7

This Honors Thesis is brought to you for free and open access by the Student Theses at Bucknell Digital Commons. It has been accepted for inclusion in Honors Theses by an authorized administrator of Bucknell Digital Commons. For more information, please contact dcadmin@bucknell.edu.

Investigation of the Design of a Bistable Micro-Chemical-Mechanical Device Utilizing Lateral Buckling

by

Susan Barnes

A Thesis Submitted to the Honors Council

For Honors in Mechanical Engineering

April 14, 2010

Approved by:

Adviser: Dr. Charles Kim, Mechanical Engineering Department

Department Chairperson: Dr. James Baish, Mechanical Engineering Department

Abstract

The Gracias Laboratory at Johns Hopkins University has developed micro-grippers which utilize chemically-actuated joints to be used in micro-surgery. These grippers, however, take up to thirty minutes to close fully when activated by biochemicals in the human body. This is very problematic and could limit the use of the devices in surgery. It is the goal of this research to develop a gripper that uses the Gracias Laboratory's existing joints in conjunction with mechanical components to decrease the closing time. The purpose of including the mechanical components is to induce a state of instability at which time a small perturbation would cause the joint to close fully.

The main concept of the research was to use the lateral buckling of a triangular gripper geometry and use a toggle mechanism to decrease the closure time of the device. This would create a snap-action device mimicking the quick closure of a Venus flytrap. All developed geometries were tested using finite element analysis to determine if loading conditions produced the desired buckled shape.

This research examines lateral buckling on the micro-scale and the possibility of using this phenomenon in a micro-gripper. Although a final geometry with the required deformed shaped was not found, this document contains suggestions for future geometries that may produce the correct deformed shape. It was determined through this work that in order to obtain the desired deformed shape, polymeric sections need to be added to the geometry. This simplifies the analysis and allows the triangular structure to

buckle in the appropriate way due to the added joints. Future work for this project will be completed by undergraduate students at Bucknell University. Fabrication and testing of devices will be done at Johns Hopkins University in the Gracias Laboratory.

Table of Contents

Abstract iv

List of Figures ix

List of Tables xi

1. Introduction 1

1.1 Gracias Laboratory Research 1

1.1.1 Chemically-Actuated Joints 2

1.1.2 Fabrication Methods 2

1.1.3 Uses of Chemically-Actuated Joints 4

1.1.4 Testing of Micro-Grippers 6

1.1.5 Issues with Chemical Actuation 7

1.2 Bistability 7

1.2.1 Examples of Bistability 8

1.2.2 “Ball-on-the-Hill” Analogy 9

1.2.3 History of Bistable Mechanisms 10

1.2.4 Advantages of Bistability 14

1.2.5 Bistability in Micro-Devices 15

1.3 Buckling 17

1.3.1 Euler Buckling 17

1.3.2 Lateral Buckling 19

1.3.3 Buckling Modes 21

1.4 Project Goals and Methods 22

2. Initial Concepts and Analysis 23

2.1 Basic Concept 23

2.1.1 Inspiration of Design 24

2.1.2 Finite Element Analysis 26

2.1.3 Results of Analysis 27

2.2 Concept 2: Use of Beams as Trigger for Lateral Buckling 28

2.2.1 Accordion-Shaped Joint Mechanism 29

2.2.2 Use of Compressed Beams as Toggle Mechanism 30

2.2.3 Analysis of Geometry using Bistable Beams 30

2.2.4 Results of Analysis 32

2.3 Concept 3: Geometry for an Enclosed Gripper Mechanism 33

2.3.1 Solder Hinges and Self-Assembly 34

2.3.2 Analysis of Combined Geometry 34

2.3.3 Results of Analysis 36

2.3.4 Issues with Model 37

2.4 Conclusions from Initial Analysis 38

3. Concept 4: Collapsing Triangle Gripper 39

3.1 Geometry 39

3.1.1 Joint Mechanism 40

3.1.2 Triangular Structure 41

3.2 Analysis 41

3.3 Results of Analysis 43

4. Introducing Polymer Sections to the Model 45

4.1 Concept 5: Polymer Crossbars 45

4.1.1 Analysis 46

4.1.2 Results of Analysis 48

4.2 Concept 6: Polymer Triangle Tips 49

4.2.1 Analysis 50

4.2.2 Results of Analysis 52

4.3 Benefits and Issues Arising from Analysis 54

5. Discussion 56

5.1 Energy of Buckled State 56

5.2 ANSYS Modeling 57

5.3 Conclusion from Analyzed Geometries 57

6. Future Work 61

6.1 Future Work at Bucknell University 61

6.1.1 Changes to be Considered in Future Concepts 62

6.2 Future Work at Johns Hopkins University 63

7. Conclusion 65

References 67

List of Figures:

Figure 1. Diagram of key manufacturing and operation steps of tri-layer joint [4] 3

Figure 2. Gripper geometry [2] 4

Figure 3. Schematic of joint in a chemically-actuated micro-gripper and changes in geometry induced by chemical reactions [3] 5

Figure 4. Optical microscopy sequence showing the capture and retrieval of live L929 fibroblast cells from a capillary tube by a biochemically-actuated micro-gripper [9] 6

Figure 5. Photo of light switch and diagram of bistable switching mechanism [13] 8

Figure 6. “Ball-on-the-Hill” analogy for determining stability [13] 10

Figure 7. Partially-Compliant, snap-action bistable toggle mechanism analyzed by Schulze in its first bistable position [13] 11

Figure 8. Partially-Compliant, snap-action bistable toggle mechanism in its second stable position [13] 11

Figure 9. Plot of potential energy, crank torque, and second derivative of energy for mechanism shown in Figures 7 and 8 [13] 12

Figure 10. Slider-crank bistable mechanism [14] 14

Figure 11. Early bistable micro-device of H□lg, 1990 [14] 15

Figure 12. Thermally-actuated bistable micro-device developed by Matoba et al., 1994 [14] 17

Figure 13. Sketch of Euler buckling modes and equivalent lengths resulting from differing end conditions [19] 18

Figure 14. Sketch of lateral buckling of a cantilever beam [20] 20

Figure 15. Sketch of preliminary design for integration of mechanical toggle mechanism and chemically-actuated micro-joints 23

Figure 16. Sketch of toggle mechanism 24

Figure 17. Hair clips demonstrating lateral buckling of a triangle [22] 25

Figure 18. Initial ANSYS model of triangular structure to achieve lateral buckling 26

Figure 19. Gripper geometry utilizing accordion joint mechanism, bistable beams, and two triangular structures 28

Figure 20. Profile of accordion-shaped joint mechanism 29

Figure 21. Model created in ANSYS for analysis and proof of lateral buckling using bistable beams 31

Figure 22. Diagram of new geometry to create an enclosed gripper 33

Figure 23. ANSYS analysis of two connected base structures 35

Figure 24. Sketch of collapsing triangle design geometry 40

Figure 25. ANSYS analysis of collapsing triangular structure 42

Figure 26. Sketch of collapsing triangle geometry with polymeric crossbars and no tips of the triangle 46

Figure 27. ANSYS analysis of collapsing triangular structure with polymeric crossbars and no tips 48

Figure 28. Sketch of collapsing triangle structure with no crossbars and sections to be replace with a polymer circled 50

Figure 29. ANSYS model of collapsing triangular structure with no cross bars and polymeric tips 51

Figure 30. Deformed shape of collapsing triangular structure with no crossbars and polymeric tips with various applied loads 52

List of Tables:

Table 1. Summary of six concepts and benefits and issues arising from each 58

1. Introduction

The goal of this project is to demonstrate that response time of micro-electro-chemical devices can be significantly decreased by using the chemically-actuated joints in conjunction with a mechanical element. This project advances the existing technology to make the action similar to a Venus flytrap which is able to close in ten milliseconds. This project demonstrates, via analysis and simulation, that mechanical elements can be used to improve the response time of devices made at the Gracias Laboratory at Johns Hopkins University. This work included designing various mechanism geometries and performing finite element analysis on each to determine the best gripper geometry.

1.1 Gracias Laboratory Research

The Gracias Laboratory at Johns Hopkins University was started in 2003 by David Gracias, an associate professor of chemical and biomolecular engineering. The purpose of the laboratory is to further the field of miniaturization and the interface between engineered and living systems. One of the major research areas for the laboratory has been micro-chemical-devices and more specifically reversible chemically actuated micro-scale machines [1].

1.1.1 Chemically-Actuated Joints

Chemical actuation allows for tetherless operation which is unachievable using traditional electromagnetic or pneumatic signals. Chemical actuation is also beneficial because it is very versatile and chemical reactions are very specific as to which chemicals will react. This means that a chemically-actuated system can be developed to autonomously respond only when in the presence of a single distinct chemical trigger [2]. In the process of developing chemically-actuated micro-scale machines, the Gracias Laboratory developed chemically-actuated layered joints. These joints close when exposed to the chemical triggers acetic acid (CH_3COOH) and hydrogen peroxide (H_2O_2) or the biological triggers L-glutamine, glucose, and L929 media [3,4].

1.1.2 Fabrication Methods

The layered joints are composed of a polymeric layer and a metallic bilayer of chromium and copper [4]. Figure 1 shows a diagram detailing the important fabrication and operation steps of the joints. The joints are manufactured using photolithography [5]. Photolithography is inherently two-dimensional as all fabrication is done in thin layers [6]. It is very difficult to construct three-dimensional micro-devices using this process. Three-dimensional micro-structures can be fabricated using these methods, but must first be created in two-dimensions and then manipulated into a three-dimensional shape [7]. The Gracias Laboratory has been successful in developing methods of making three-dimensional objects using liquid solder hinges to allow the device to self-assemble due to

the surface tension of the solder [6, 8]. This however is a very complicated process and it is therefore preferable to construct everything in only two dimensions.

To manufacture the bilayer, thin films of chromium and copper are deposited by thermal evaporation onto a sacrificial layer. As a result of this process, the chromium layer develops a residual tensile stress due to the low mobility of atoms on the crystal surface and the copper remains stress neutral [2].

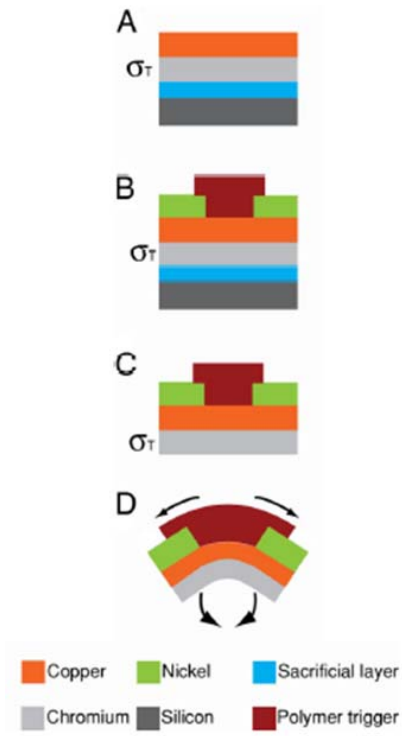

Figure 1. Diagram of key manufacturing and operation steps of trilayer joint, (a) chromium and copper bilayer is evaporated above a sacrificial layer and silicon substrate, a residual stress, σ_T, develops in the chromium layer, (b) nickel phalanges and polymer trigger are patterned above the bilayer, (c) sacrificial layer and substrate are dissolved, (d) when joint is exposed to certain chemicals, the polymer trigger is compromised and the joint bends [4]

This residual tensile stress creates the differential stress that will eventually lead to the bending of the joint. Without the polymer trigger or the sacrificial joint, the joints would

close spontaneously [2]. After the bilayer is fabricated, a polymer trigger and nickel phalanges are patterned using two steps of photolithography. The final step is to dissolve the sacrificial layer. Chemical reactions cause the polymer to expand which will then allow the joint to close [4].

1.1.3 Uses of Chemically-Actuated Joints

The researchers at the Gracias Laboratory have used the chemically-actuated joints in different geometries to make chemically-actuated, single-use, reversible tools in the form of micro-grippers. These grippers utilize multiple joints and nickel phalanges to achieve pick-and-place behavior [3]. Figure 2 shows the geometry of the micro-gripper.

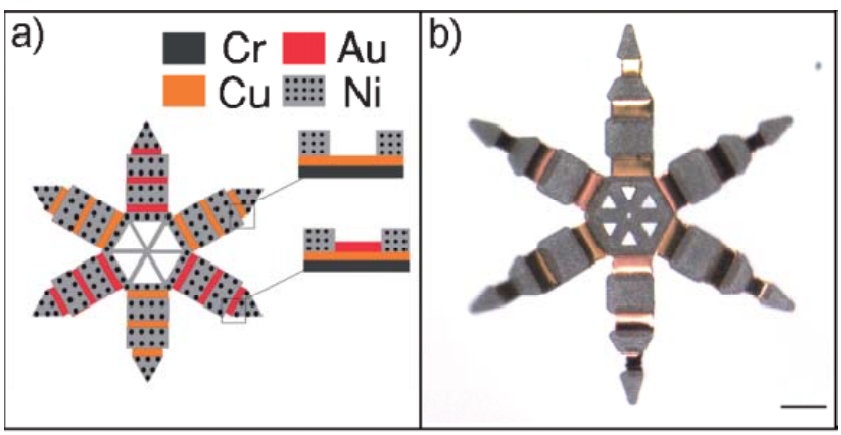

Figure 2. Gripper geometry, (a) shematic of gripper and chemically-actuated joints, (b) micro-gripper, scale bar is 100 µm [2]

The gripper shown in Figure 2 uses two different types of joints: the regular chromium and copper joint and a joint with a layer of gold in addition to the bilayer. The addition of the gold layer prevents the oxidation of the copper causing the joint to close in the opposite direction. Figure 3 shows the chemical processes involved in closing and

opening the joints and the gripper. The gripper is closed when the polymer trigger is dissolved by acetic acid (CH_3COOH) and opened when the prestressed copper layer within the joints is dissolved by hydrogen peroxide (H_2O_2) [3].

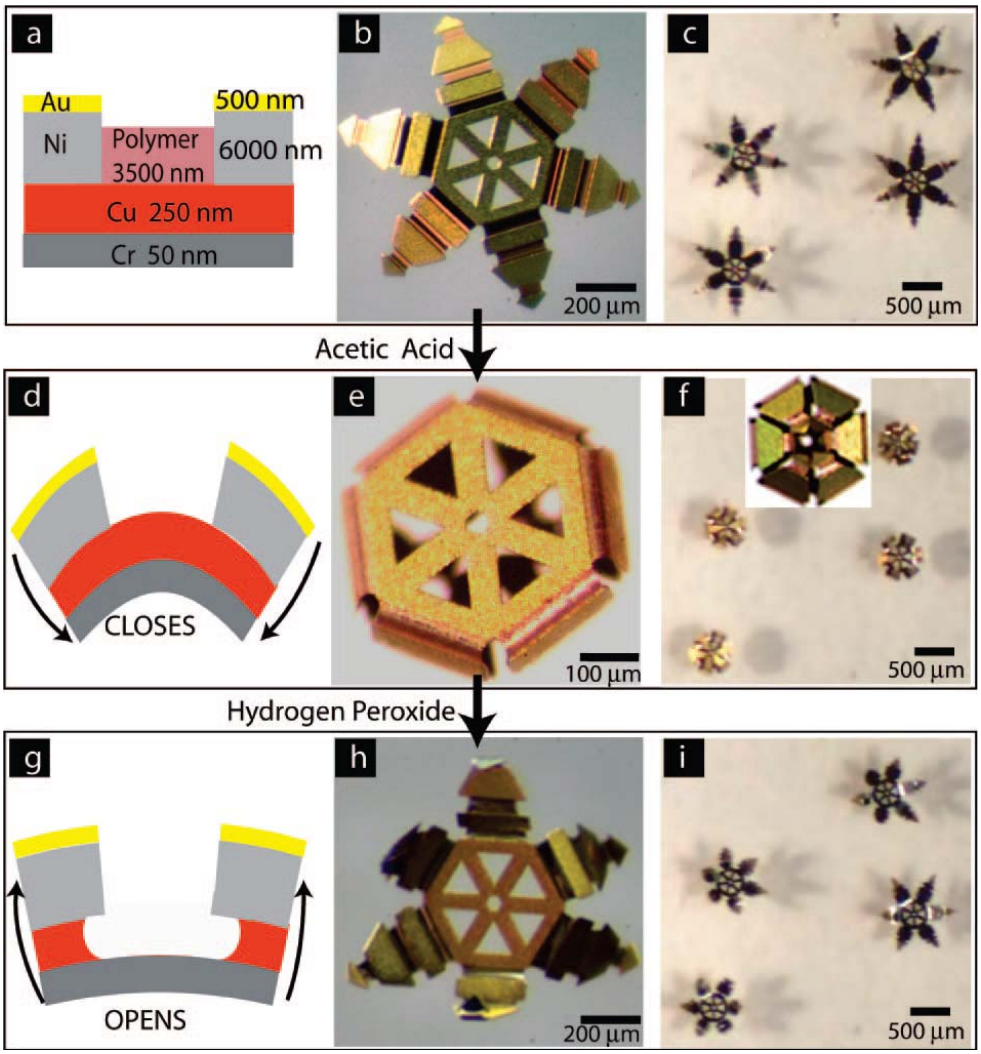

Figure 3. Schematic of joint in a chemically-actuated micro-gripper and changes in geometry induced by chemical reactions [3]

1.1.4 Testing of Micro-grippers

The micro-gripper mechanisms developed by the Gracias Laboratory are the first prototypes toward the development of microsurgical tools. The end goal of this research is to combine these tools, as well as other micro-scale grippers, cutters, and other surgical devices, to create a new way of doing noninvasive surgery by allowing autonomous tools to travel through the conduits of the body [9]. The Gracias Laboratory has completed successful testing of the micro-grippers to retrieve live L929 fibroblast cells from dense cell masses in capillary tubes. The grippers in these experiments were remotely guided by magnets [4]. Figure 4 shows a sequence of video images taken during these experiments.

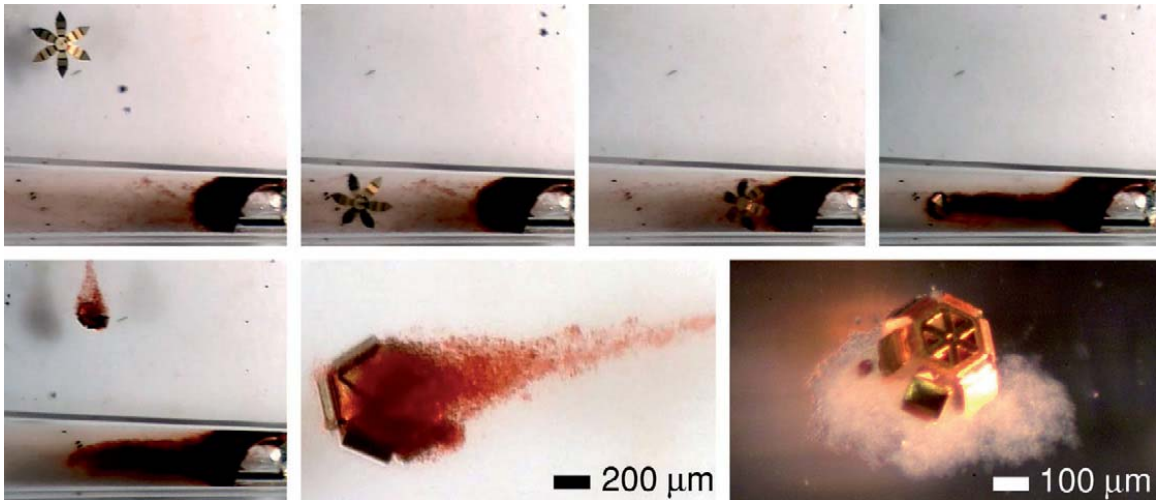

Figure 4. Optical microscopy sequence showing the capture and retrieval of live L929 fibroblast cells from a capillary tube by a biochemically actuated micro-gripper [9]

Since driven motion by magnetic force is not a viable method of guiding the grippers in vitro, the Gracias Laboratory has also researched solvent-driven motion and passage through biological conduits as possible movement methods [9, 10]. The results of these

experiments have proven these tools to be strong enough for in vitro tissue biopsy. The use of LIVE/DEAD stain to be able to detect the health of the captured cells also proved that the cells were not damaged by the gripper [4].

1.1.5 Issues with Chemical Actuation

One problem with chemical actuation is that it is relatively slow. The grippers can take up to thirty minutes to close fully when actuated by a biochemical trigger [4]. Due to the nature of surgery, any delay in response from equipment is undesirable and could lead to the technology never being used. It would therefore be desirable to decrease the amount of time needed for the gripper to close. The Gracias Laboratory has created untethered micro-devices which are able to actuate and close much more quickly using solder hinges and lithographically two dimensional templates [11]. In this process, however, the motion of these devices is driven by surface tension and this is unable to be triggered by biochemicals and often occurs spontaneously [12]. The goal of this research is to show that the closing time of a chemically-actuated micro-gripper can be decreased by changing the geometry and utilizing the mechanical property of bistability.

1.2 Bistability

Bistable mechanisms are mechanical devices that have two points of static equilibrium along their paths of motion. These mechanisms provide many advantages over traditional mechanisms especially when compliant elements are utilized. Compliant

bistable mechanisms are able to reduce friction, increase joint clearance, minimize size and weight, and simplify manufacturing. Bistable mechanisms are able to remain in either stable position without the application of external forces. External forces are only needed to transition the mechanism between its two stable positions.

1.2.1 Example of Bistability

Many common systems utilize bistable mechanisms to achieve their intended purpose. One very common example of a bistable mechanism is a switch, such as a light switch. Figure 5 shows a diagram of a bistable light switch.

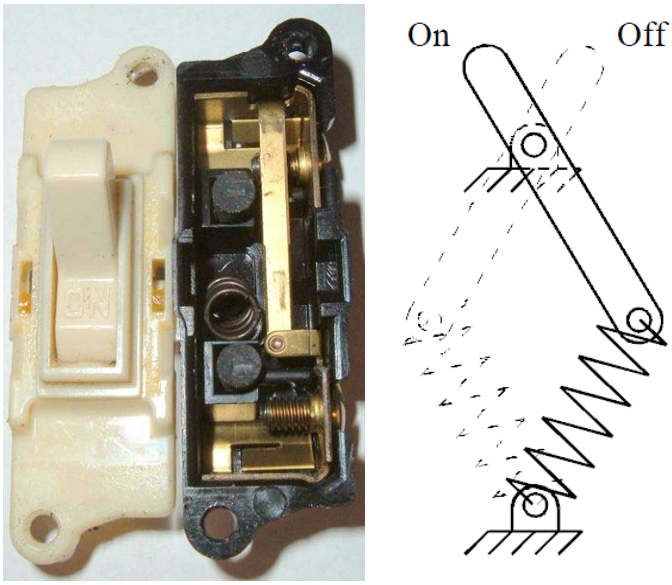

Figure 5. Photo of light switch and diagram of bistable switching mechanism [13]

The bistable nature of such a switch allows it to remain in either the on or off position without the application of any external forces. Switches are often human-actuated and force is only required to transition between the on and off positions. If these switches

were not bistable, external force would be required to keep the switch in the on or off position. This would be impractical in most cases. Bistability allows for the very simplistic design of common switches. This mechanism uses a spring to achieve bistability. The spring is in the same equilibrium state in both the on and off positions. While the switch is moving between the two stable positions, the spring is compressed and stores energy. If left in between the two positions, the energy stored in the spring will force the switch into one of the equilibrium positions. At either the on or off position, the switch is at a point of static equilibrium, meaning that the switch is motionless and will remain as such until a force is applied to the system. More recently research about the use of compliant mechanisms to achieve bistability has been performed and many successful prototypes and products have been created. Other common devices such as automobile trunks and on/off buttons utilize bistability to achieve their desired function.

1.2.2 "Ball-on-the-Hill" Analogy

A graphical representation of stability is illustrated by Figure 6, which shows the common "Ball-on-the-Hill" analogy of stability. The balls in positions A and C are stable since they would return to the same positions if a small disturbance was introduced. The ball in position B is unstable since any disturbance would cause the ball to roll from the hilltop. The ball at position D is neutrally stable because it would remain in its disturbed position after a disturbance was introduced. The ball in position E is also stable because

it would return to its original position if disturbed. However, this point of stability is achieved by adding a stop along the ball's path so it is no longer able to roll down the hill.

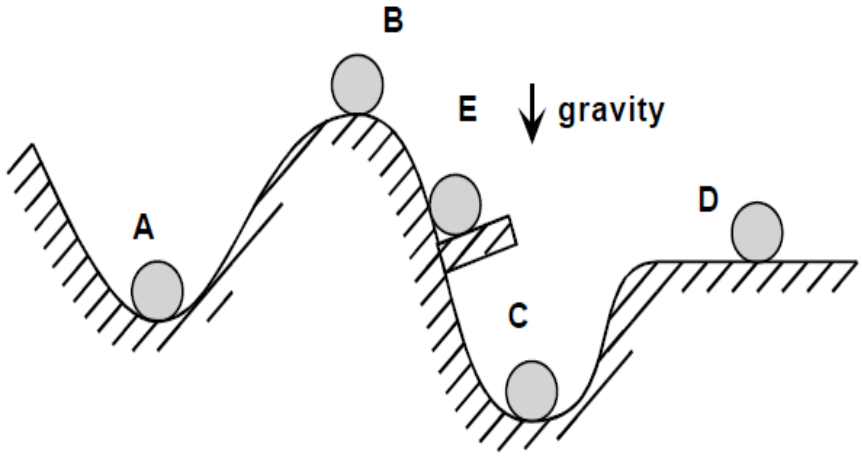

Figure 6. "Ball-on-the-Hill" analogy for determining stability: Positions A, C, and E are stable, B is unstable, and D is neutrally stable [13].

A mechanism is considered to be bistable if two points along its path of motion meet the definition of stability. These two points of stability are usually at the two extremes of the range of motion [15]. Between the two stable positions, mechanisms are unstable. This instability often results in the mechanism returning to a stable position even if it is left between the two stable positions. This is especially beneficial for on/off switches or locking mechanisms which should not be able to remain in an in-between position.

1.2.3 History of Bistable Mechanisms

Bistable mechanisms were used as switches, fasteners, covers, and doors even before the term bistability was coined. The theory behind bistable switching devices was

first derived in 1955 by Schulze. These equations were applicable to partially-compliant snap-action toggles such as the one shown in Figures 7 and 8.

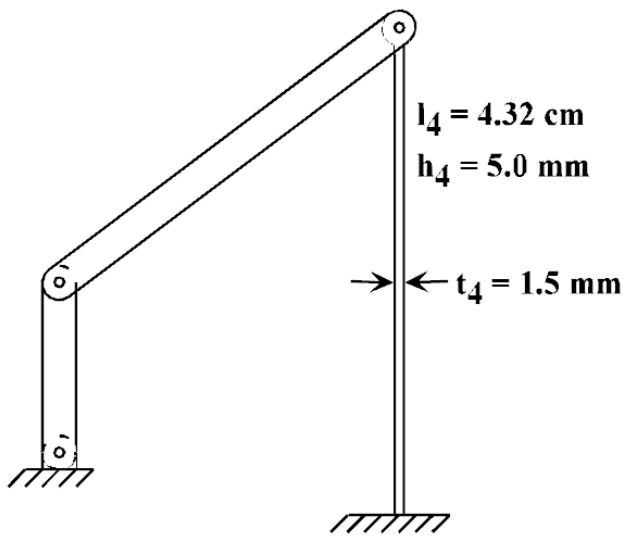

Figure 7. Partially-compliant, snap-action bistable toggle mechanism analyzed by Schulze in its first stable position [13]

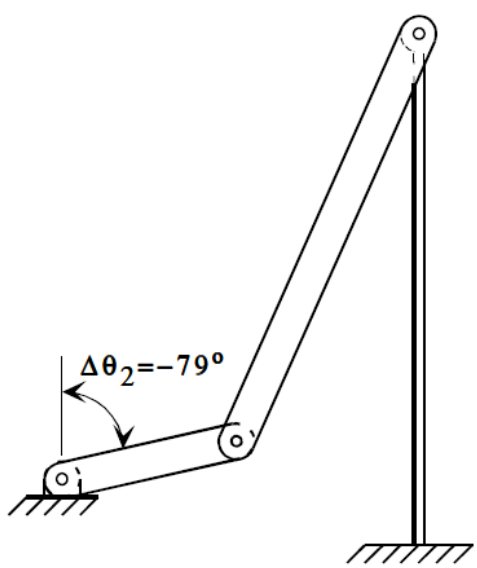

Figure 8. Partially-Compliant, snap-action bistable toggle mechanism in its second stable position [13]

The equations were based on maximizing the force needed to switch the device between bistable positions with respect to the base area of the mechanism. After this theory was published, various researchers analyzed differing stability theories and developed macro-scale bistable devices [13]. Using the pseudo-rigid-body model, the potential energy and torque curves for the entire path of motion of the mechanism can be determined. The pseudo-rigid-body model allows many compliant segments of a mechanism to be displayed as two or more rigid member joined by a pin joint [14]. The spring constant of a bistable mechanism is equivalent to the first derivative of the potential energy curve. The derivative of the spring constant, or the second derivative of the energy curve, is the force exerted by the system. Figure 9 shows the torque and energy curves along with the second derivative of the energy curve for the mechanism shown in Figures 7 and 8.

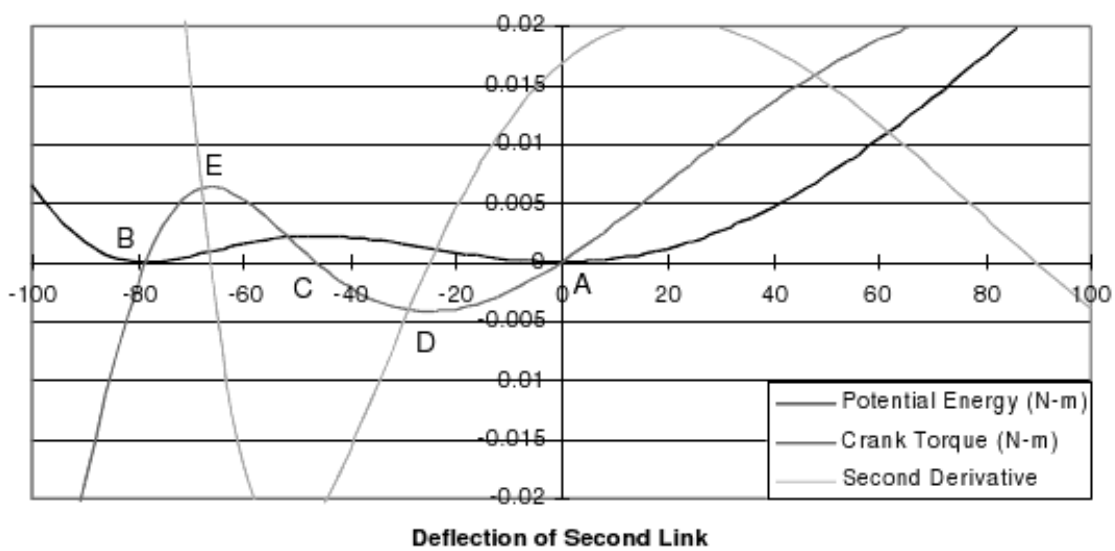

Figure 9. Plot of potential energy, crank torque, and second derivative of energy for mechanism shown in Figures 7 and 8 [13]

The stationary values and curvature of the potential energy curve can be used to determine stability. A mechanism is in a stable equilibrium position when the first derivative of the potential energy curve is zero and the second derivative is positive. A mechanism is in an unstable position when the first derivative of the potential energy curve is stationary and the second derivative is negative. A mechanism is in a neutrally stable position when both the first and second derivatives of the potential energy curve are zero at a given point [13].

Bistability can also be achieved by adding a stop along the path of motion of a mechanism. At a stop, the mechanism will be at a point of stability and unable to continue along its path. Stops can also be added to a bistable mechanism to change the location of its points of equilibrium. This principle is demonstrated by the mechanism in Figure 10. This slider-crank mechanism uses a spring to achieve bistable behavior. In Figure 10a, the mechanism is shown in its two natural positions of stability. When the mechanism is in a stable position, the spring is at its rest length. When the mechanism is moved from one of these positions, the spring is stretched and stores the energy that is elongating it. When actuation is removed from the system, the mechanism will automatically return to the closest stable position as the spring releases any stored energy and returns to its rest length. Figure 10b shows the same mechanism with a stop added. The mechanism still has two points of stability: one of these points remained the same and the other has been moved by the inclusion of the stop which does not allow the links to move past a certain point along its path of motion.

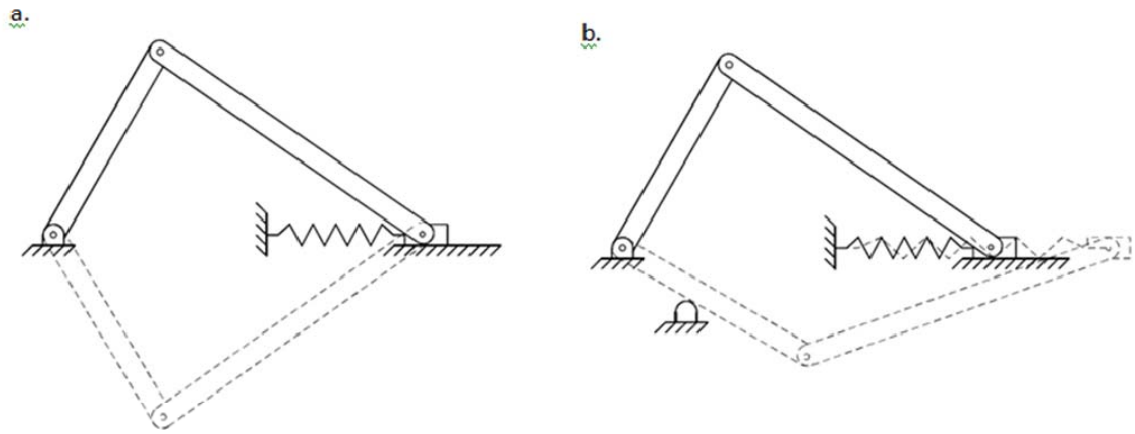

Figure 10. Slider-crank bistable mechanism (a) showing two natural stable positions and (b) with a stable position created by introducing a stop [14]

1.2.4 Advantages of Bistability

The main advantage of using a bistable mechanism is the reduction in required power. Bistable mechanisms do not require any power input to remain in either stable position. Power is only required to transition the mechanism between the two positions of stability [14]. While in either stable position, bistable mechanisms can also apply a contact force. It is a unique feature of bistable mechanisms to be able to apply this contact force without external actuation [16].

The output of a bistable mechanism is also highly repeatable since the mechanism will always return to the same equilibrium position. Controlling bistable mechanisms is also relatively simple [17]. A mechanism that does not have two points of stability requires intricate control systems to keep the system in the correct location and to maneuver between locations.

1.2.5 Bistability in Micro-Devices

It is only in recent years that it was recognized that bistable mechanisms could be utilized in micro-devices. Bistable mechanisms where seen as a way to decrease joint clearance and friction in micro-devices [15]. Bistable mechanisms have since been designed with compliant elements to further reduce the effects of multiple parts and joints. Simple micro-electro-mechanical systems (MEMS) have been built and tested that rely upon bistable mechanisms. Bistable mechanisms reduce the amount of joint friction, minimize the number of required parts, and reduce the weight of switching and toggle mechanisms needed in many MEMS devices [14].

The first bistable micro-device was developed by Hälg in 1990. This device utilized a buckling beam to achieve bistability and opened the field of bistable micro-devices. The fundamental device was composed of a flexible beam that curved out of the plane above a substrate. The device is shown in Figure 11.

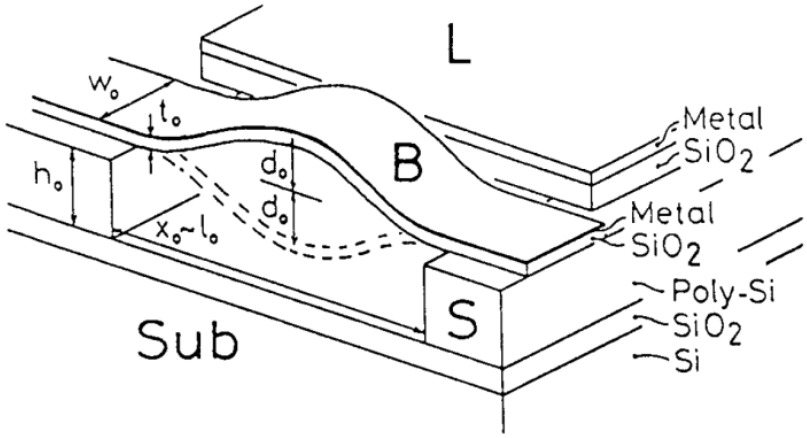

Figure 11. Early bistable micro-device of Hälg, 1990 [14]

The defining second stable position was achieved by pulling on the device with electrostatic forces. This action resulted in the beam curving downward toward the substrate. It was noted from this design that many prototypes remained stable in the downward position even after the power supplied to the system was removed. Although the device was in equilibrium initially and in equilibrium in the downward position, the device was unable to switch back to the original stable state without breaking. Additionally, Hälg did not attempt to define stability, present a stability theory, nor explain the forces necessary to keep the beam buckled in his introductory report [14].

Substantial progress has been made since Hälg instantiated the first bistable MEMS device. Fully-compliant bistable micro-mechanisms have been designed for the application of switching devices. Relays, valves and clips are well suited for use in applications of bistability because each mechanism is comprised of only a pair of initially cosine-shaped parallel beams that are clamped together at their centers [16].

Following Hälg's work with micro-scale bistable mechanisms, Matoba et al. developed a micro-mechanism that utilized thermal expansion to achieve bistability as shown in Figure 12. Residual tensile stress in a silicon nitride band caused upper and lower polysilicon cantilever beams to buckle which in turn caused a U-shaped cantilever to buckle. The U-shaped cantilever buckled either upwards or downwards, achieving bistability [14].

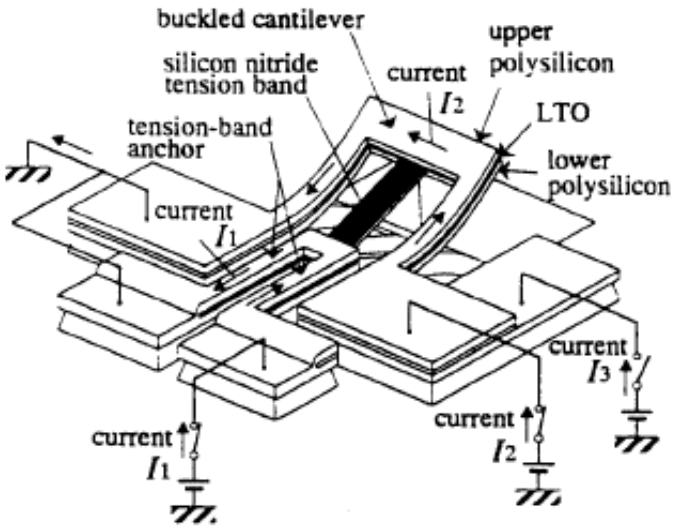

Figure 12. Thermally-actuated bistable micro-device developed by Matoba et al., 1994 [14]

1.3 Buckling

In order to develop a micro-gripper with a shorter closing time, out-of-plane buckling was considered. This phenomenon would allow a small input force from the chemically-actuated joints to cause relatively large gripping motion. A device that utilizes buckling would also be useful because it could be fabricated in two-dimensions and then achieve a three-dimensional deformed shape.

1.3.1 Euler Buckling

Standard in-plane column buckling may be described by Euler beam buckling theory. This theory states that a column will buckle if the applied axial loading is greater

than the critical buckling load of the column. The critical buckling load can be calculated using the Euler formula:

$$P_{cr} = \frac{\pi^2 EI}{{L_e}^2} \qquad \text{(Eq. 1)}$$

where P_{cr} is the critical load, E is the modulus of elasticity, I is the second moment of area, and L_e is the effective length of the column. The effective column length is determined from the end conditions of the beam [19]. Figure 13 displays the most common end conditions and resulting effective lengths to be used in Equation 1. Euler buckling theory is entirely governed by Equation 1 and analysis of these systems is relatively simple.

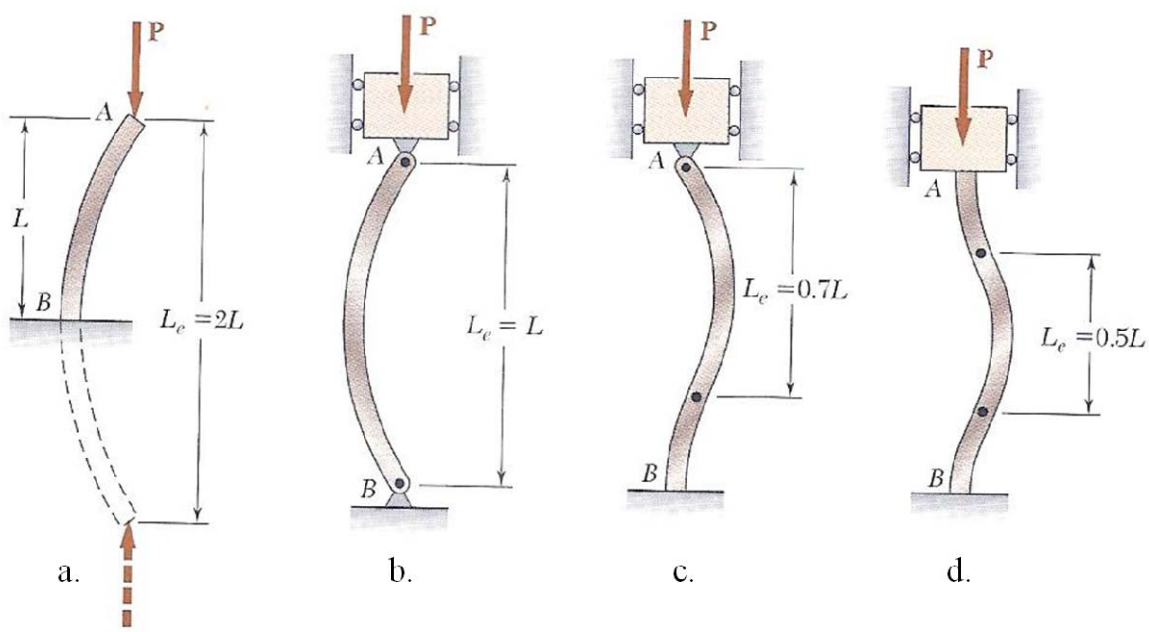

Figure 13. Sketch of Euler buckling modes and equivalent lengths resulting from differing end conditions, (a) one fixed end and one free end, (b) both ends pinned, (c) one fixed end and one free end, (d) both ends fixed [19]

1.3.2 Lateral Buckling

The buckling examined in this research is lateral buckling and cannot be analyzed using the Euler method. Lateral buckling is buckling that occurs out of the plane of the device and applied loadings. Lateral buckling was chosen as it is able to transform a two-dimensional structure into a three-dimensional structure with a bistable phenomenon. This is helpful for this application because the devices will be manufactured in two-dimensions but must convert to three-dimensions in order to achieve a gripping motion.

Beams without lateral support will buckle laterally at a certain critical load if bent in the plane of greatest flexural rigidity. The critical load to cause a beam to buckle laterally may be applied in the form of pure bending, a pure moment, or a combination of the two. For a horizontal, cantilever beam with force applied at the centroid of the cross section directly downwards, lateral buckling will occur [20]. Figure 14 shows this loading case and the resultant buckled shape. In this case the force causes the beam to deflect downward and, when the critical load is reached, the beam buckles laterally out-of-the-page.

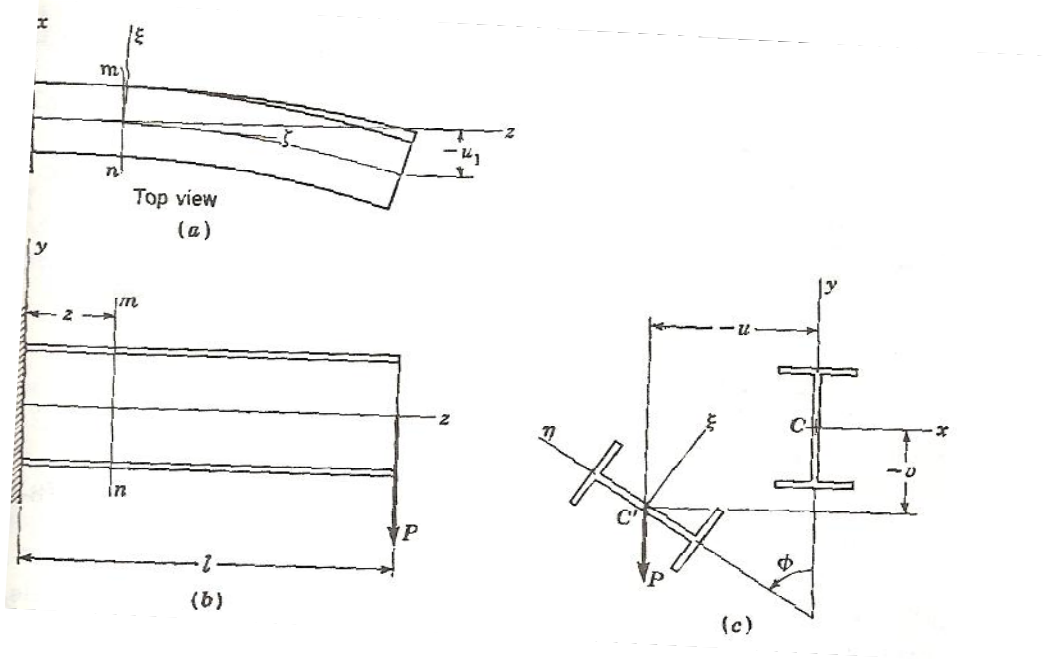

Figure 14. Sketch of lateral buckling of a cantilever beam, (a) downwards deflection caused by applied force, (b) loading condition, (c) end view of lateral buckling [20]

The equations to determine the critical load for the pure bending or pure moment loading conditions are provided in Timoshenko, 1961 [20]. The equations are linear, differential equations which can be solved for simple loading cases. The equation that characterizes the behavior of lateral beam in pure bending is:

$$C_1 \frac{d^4\phi}{dz^4} - C\frac{d^2\phi}{dz^2} - \frac{{M_o}^2}{EI}\phi = 0 \qquad \text{(Eq. 2)}$$

where C_1 and C are constants, φ is the angle of twist of the beam, M_o is the moment applied to the beam, E is the modulus of elasticity of the material, and I is the moment of inertia of the cross section of the beam. The equation for characterizing the lateral buckling behavior of cantilever beam subjected to a pure moment is:

$$C_1 \frac{d^4\phi}{dz^4} - C\frac{d^2\phi}{dz^2} - \frac{P^2}{EI}(l-z)^2\phi = 0 \qquad \text{(Eq. 3)}$$

where C_1 and C are constants, φ is the angle of twist of the beam, P is the force applied to the beam, E is the modulus of elasticity of the material, I is the moment of inertia, and l is the distance between the fixed end of the beam and the point at which the force is applied.

The beams analyzed in this research can be approximated as cantilever beams buckling laterally. The loading, however, is not perpendicular to the beam and therefore causes both a bending force and a moment. With this combined loading condition, the specific solutions provided in Timoshenko are no longer valid. The analysis is nonlinear and equilibrium is taken at the deformed state to determine the governing equations. Since the deformed state for the two loading conditions is different, the governing equations cannot be added to solve for the combined loading case. The combined equations are cumbersome and are not amenable to traditional methods for solving differential equations. In order to determine the buckling behavior of the combined systems in this research, finite element analysis was used.

1.3.3 Buckling Modes

In both Euler buckling and lateral buckling, the beams are able to buckle in different shapes. The buckled shape depends upon the boundary conditions of the beam. Due to the classical definition of equilibrium, the beam will buckle according to the end conditions in such a way as to achieve the lowest possible energy level. This is the Principle of Equilibrium. Figure 13 shows different buckling modes of a beam under an axial force. Figures 13a and 13b show first order buckling. This is the natural state of

buckling for a beam and requires the least amount of force to buckle. Figure 13c and 13d show higher order buckling loads due to the more rigid boundary conditions. These beams are forced to assume this higher energy buckling shape because of the end conditions which prevent them from assuming the shape of the lowest energy buckling state. The different modes of buckling will become very important in determining the boundary conditions needed to achieve the correct buckled shape of the mechanism.

1.4 Project Goals and Methods

The main goal of this project is to design and analyze bistable micro-devices that utilize lateral buckling. The final product of this research is knowledge about the boundary conditions, buckling behavior, and correct geometry that has a high probability of achieving a micro-gripping action with some small design refinement. This goal was achieved by designing and analyzing a variety of systems. The analysis of each design led to a series of observations and problems that led to design changes and new concepts. The analyses were completed in the finite element analysis software package, ANSYS. The deformed shapes obtained from the analyses provided insight about the behavior of lateral buckling. The new concepts were based on the issues with the deformed shapes of the previous analysis.

2. Initial Concepts and Analysis

2.1 Basic Concept

The basic concept for the integration of mechanical elements and the Gracias Laboratory's chemically-actuated joints was a triangular geometry utilizing a toggle mechanism to achieve bistability. An initial sketch of this geometry is shown in Figure 15.

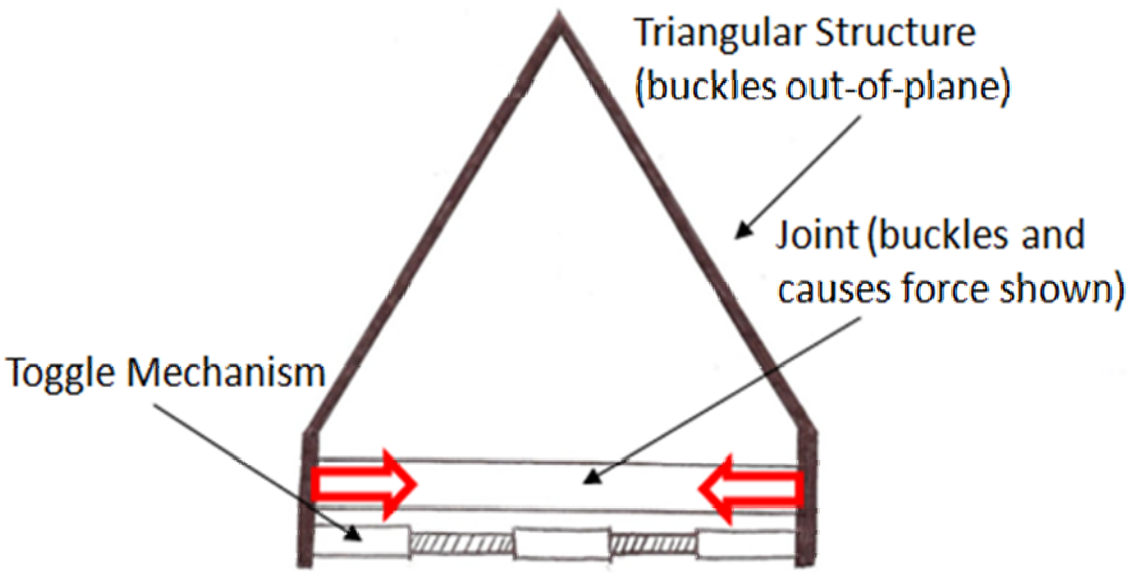

Figure 15. Sketch of preliminary design for integration of mechanical toggle mechanism and chemically actuated micro-joints

A toggle mechanism is a mechanism in which all joints are along a single line. Figure 16 shows a toggle mechanism before and after introducing a perturbation to the system. When a force is applied along this same line, the system is unstable but no motion occurs

because the applied forces are balanced and directly aligned. At this point, any perturbation will cause the toggle to close [21].

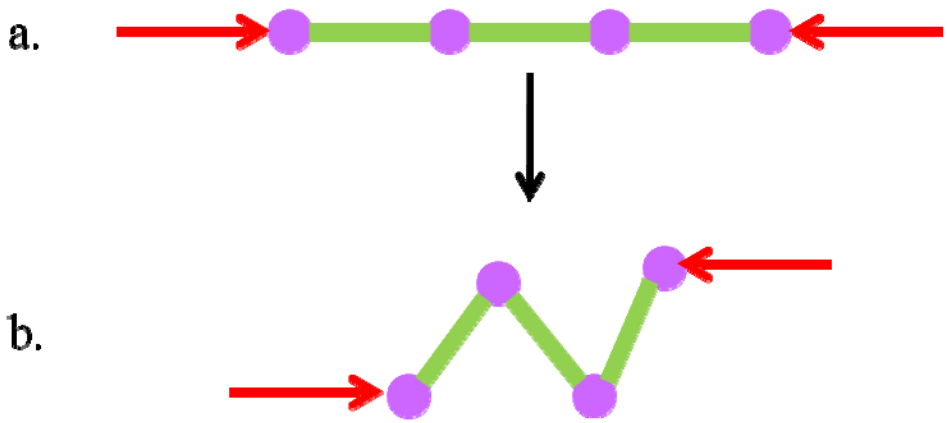

Figure 16. Sketch of toggle mechanism, (a) load applied but no peturbation, (b) mechanism collapses after peturbation is applied to the system

In the basic concept, when the joint is activated, an inwards force (indicated by the red arrows in Figure 15) will develop. This force will cause the toggle mechanism to become unstable. When a small perturbation is introduced to the system, the toggle will close and a large inwards force will develop on the triangular structure. This inwards force will cause the triangular structure to buckle laterally out-of-plane.

2.1.1 Inspiration of Design

The idea of using a triangular shape to achieve lateral buckling was inspired by triangular hair clips which use the same concept. "Contour" hair clips utilize two thin strips of metal attached at an acute angle as shown in Figure 17. When the other two ends of the metal are brought together, the strips buckle laterally. The clips use the buckled shape to conform to the wearer's head. In the case of the micro-chemical-

mechanical concept shown in Figure 15, the shape would be used in conjunction with other identical triangles to form a gripper with an enclosed geometry.

Figure 17. Hair clips demonstrating lateral buckling of a triangle [22]

This basic concept was chosen because it requires little space or other components. The manufacturing would be relatively simple and the space required in one plane to achieve a large range of motion out of the plane is quite small. The deflection caused by lateral buckling also provides a large deflection from a small input motion. This is very helpful in using the small path of motion of the chemically-actuated joints to achieve a much greater range of motion. Triangular structures can also provide a snap action that would help to achieve the end goal of decreasing the closing time of micro-grippers. There are also some issues with using this basic concept. This is an untried concept. No mechanical devices on this scale have ever been designed or implemented that use lateral buckling. The analysis of the system is also very complicated and time consuming which will slow the design process.

2.1.2 Finite Element Analysis

In order to better understand the behavior of the triangular shape, a model was created ANSYS, a finite element analysis software package. For this analysis and all subsequent analyses, the models were constructed using BEAM4 elements. These elements are uniaxial, have six degrees of freedom, with tension, compression, torsion, and bending capabilities at each node [23]. These elements are appropriate to capture the gross kinematic and static effects of the system. Using these elements, a simple triangular structure was created as seen in Figure 18a.

Figure 18. Initial ANSYS model of a triangular structure to achieve lateral buckling, (a) triangular structure with displacement boundary conditions shown in white and rotation constraints shown in yellow, (b) front view of deformed shape showing displacement of the left hand arm used to initiate buckling, (c-d) deformed shape showing lateral buckling

The bottom of the right "arm" of the model was fully constrained from translating or rotating in all coordinate directions. The bottom of the left arm was also constrained from rotating in all directions and moving in the y-direction (up and down) or in the z-direction (in and out of the page). The boundary conditions are shown in Figure 18a, where white arrows are used to denote translational constraints, and yellow double arrows are used to denote rotational constraints. This allowed for the entire upper portion of the structure to move freely.

To achieve lateral buckling, the bottom of the left arm was constrained to translate to the right. Displacements were used in place of forces to simplify the analysis. No matter the loading condition, ANSYS will not show buckling unless a perturbing force is introduced in the direction of buckling. Therefore, a small force (0.025 N) was applied in the z-direction on the uppermost point of the structure. This force was removed in subsequent load steps and the analysis was performed a second time starting with the deformed shape to eliminate the effect of the force on the final result.

2.1.3 Results of Analysis

With this model, lateral buckling was achieved. A force, in the form of a forced displacement, was applied in the x-direction and the triangular structure buckled in the z-direction. Figure 18 shows the deformed shape showing lateral buckling. This analysis demonstrates the concept of lateral buckling in a triangular structure and that this behavior can be modeled using ANSYS finite element analysis software. This also demonstrated that the initial concept of using lateral buckling will potentially work on a

small scale and that a simple linear displacement can be used accomplish buckling. The next goal of the project was to determine a geometry in which the chemically-actuated joints could be integrated and used to actuate lateral buckling. This lateral buckling could, it turn, be used as a gripper mechanism if multiple triangular shapes were connected and oriented properly.

2.2 Concept 2: Use of Beams as Trigger for Lateral Buckling

After analysis of the initial triangular structure concept, a few problems with the simplified design of a single triangular frame with a toggle mechanism were recognized.

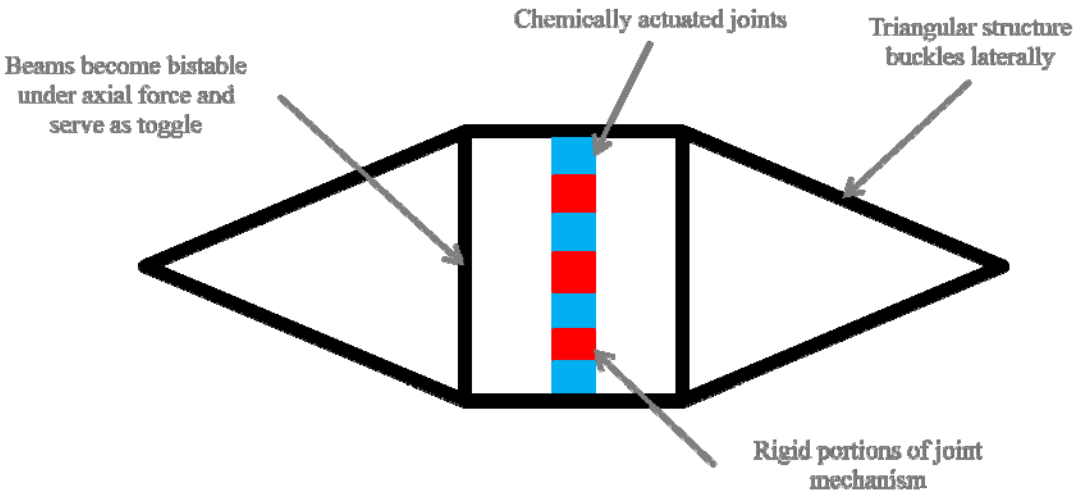

Figure 19. Gripper geometry utilizing accordion joint mechanism, bistable beams, and two triangular structures

First, a method of connecting multiple triangles to form a gripper mechanism needed to be determined. Connecting multiple triangles would be a difficult task since creating inwards force on one triangle likely means creating an outwards force on another. This

problem needed to be addressed in the next geometry analyzed. The manufacturing of the toggle mechanism and providing a way to ensure that it did not become triggered accidently also proved to be problematic. With these issues with the previous design, a new design concept was generated. Figure 19 shows the new geometry.

The theory behind this geometry in that multiple segments could be connected and when actuated, they would all buckle to form an enclosed shape as the triangles would close up the ends. This shape could be used as a gripping mechanism emulating the shape of a football.

2.2.1 Accordion-Shaped Joint Mechanism

Instead of utilizing a single chemically-actuated joint, the new geometry has four joints connected by small rigid sections. Two of the joints bend one way and the other two bend in the opposite direction which is a capability that the Gracias Laboratory has already developed in various applications [2]. By connecting these joints together an accordion shape is formed. The profile of this joint structure is shown in Figure 20.

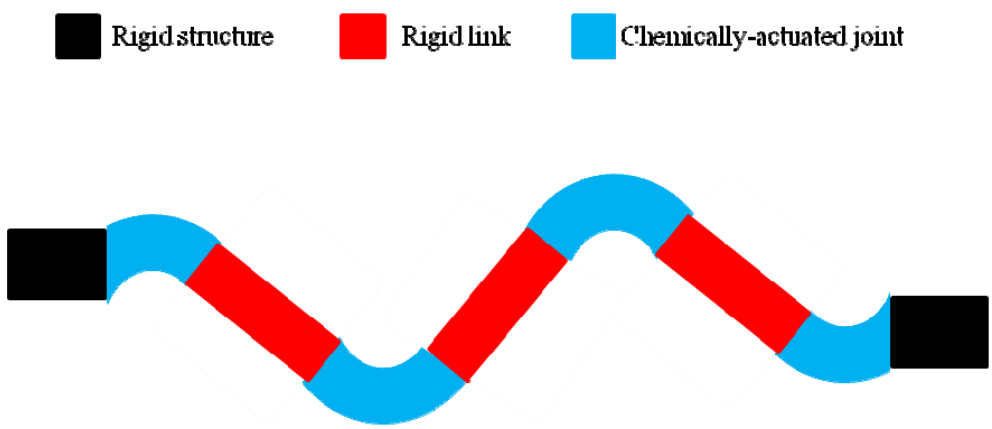

Figure 20. Profile of accordion shaped-joint mechanism

The purpose of this arrangement is to create an inwards force on the two sides of the mechanism where the ends of the joints are attached. When the joints bend, the accordion shape creates an equal force on either side of the device that is purely compressive.

2.2.2 Use of Compressed Beams as Toggle Mechanism

In this new embodiment, the toggle mechanism was replaced on either side by a crossbeam as seen in Figure 19. When the joints are actuated, the inwards force of the entire structure creates an axial force along each beam. If the system is calibrated properly, the force exerted on the beam will be just under the Euler buckling force of the beam. This will create a situation of bistability and a small perturbation will cause the beams to buckle and the large inwards force on the triangular structures will cause lateral buckling. The beams were included to introduce bistability but could also be used to tune the behavior of the mechanism. The material and size of the beam could be used to tune the mechanism to buckle at the correct applied loading.

2.2.3 Analysis of Geometry using Bistable Beams

A model of the design was created in ANSYS to analyze the geometry and demonstrate that it will result in lateral buckling. BEAM4 elements were used once again and boundary conditions and forces were applied to the structure in an attempt to

simulate the actual device with the highest possible accuracy. Figure 21 shows the analyzed ANSYS model and the resultant deformed shape.

Figure 21. Model created in ANSYS for analysis and proof of lateral buckling using bistable beams, (a) model of new geometry with set boundary conditions, (b-d) various views of deformed shape

Boundary conditions were applied to the model in such a way as to imitate the affects of the accordion-shaped joint configuration. The boundary conditions are shown in Figure 21a. Firstly, the midpoint of the lower horizontal beam was constrained from moving or rotating in any direction. The displacement boundary condition keeps the model relatively fixed in space. The rotation is constrained to eliminate twist in the beam which is reasonable since the accordion configuration of the joints should only produce translation without any rotation. The bottommost point of each vertical beam was

constrained from moving in the y-direction (up and down). This was necessary to ensure buckling of these beams. Without this constraint, the horizontal beams simply bend and the vertical beams will never buckle. These were the only boundary conditions applied to the model.

To imitate the forces exerted by the new joint configuration, a displacement was applied to the model. The midpoint of the upper horizontal beam was given a downwards displacement equal to just under half the height of the device. In the actual device, both the upper and lower horizontal beams would be deflected inwards but it was deemed to be a reasonable approximation to displace one beam and fix the other. For the same purpose as in the previous analysis of the simple triangle structure, small-scale forces in the z-direction (out of the page) were applied to the tip of each triangle. This force was applied for the first load step to initiate the lateral buckling and then removed to minimize the effect of the forces on the final deformed shape.

2.2.4 Results of Analysis

The analysis of this model showed that lateral buckling would occur as a result of this loading situation. As shown in Figure 21, both of the triangles buckled laterally in the z-direction. The top horizontal beam was displaced vertically causing the vertical beams to buckle according to Euler buckling due to the axial force along each beam. The analysis showed that this geometry could be used to achieve lateral buckling which could in turn be used as a gripper mechanism. If the chemically-actuated joint mechanism is calibrated correctly, the force it exerts along each vertical beam would be just under the

critical buckling load of the beams. This would create an unstable situation in which a small perturbation would cause the vertical beams to buckle and the triangles to buckle laterally. The next goal of the project was to combine in series multiple copies of this device to create a gripper mechanism.

2.3 Concept 3: Geometry for an Enclosed Gripper Mechanism

In order to use the geometry analyzed in the previous section, the geometry needed to be modified in order to accomplish the desired gripping behavior. Fabricating multiple devices connected in series to allow for an enclosed structure was analyzed to determine if it could be used to accomplish this task. Figure 22 shows the new geometry.

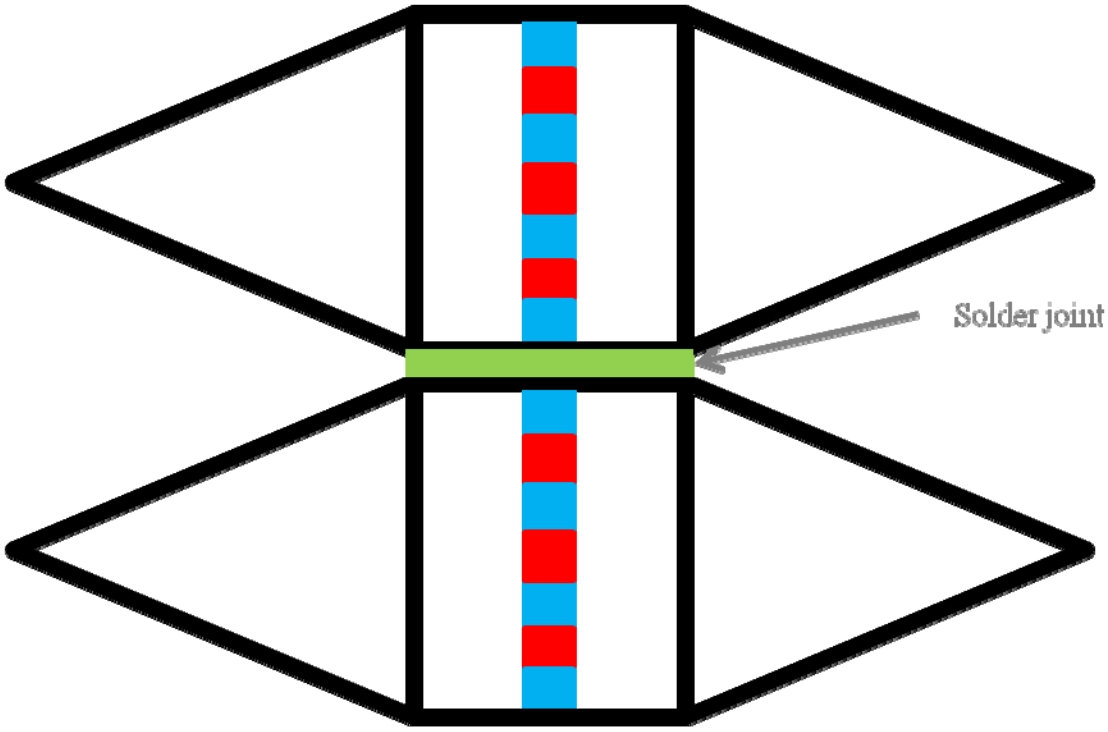

Figure 22. Diagram of new geometry to create an enclosed gripper

2.3.1 Solder Hinges and Self-Assembly

The different structures will be connected by a solder joint as shown in Figure 22. The Gracias Laboratory has done significant research and testing of solder joints as a way to fabricate three-dimensional structures in two-dimensions. Four of the structures would be connected in a line all connected with solder hinges. After initial fabrication, the surface tension in the solder hinges would bend these joints ninety degrees and the four structures would form a square [6, 8, 12]. This method of self-assembly significantly simplifies the process of manufacturing three-dimensional objects using photolithography. Once the structures had formed the square shape, the structures would operate independently and the lateral buckling of the triangles would cause the triangles to close and form a gripper.

2.3.2 Analysis of Combined Geometry

A model containing two of the base structures was created and analyzed in ANSYS using BEAM4 elements. Only two base structures were included to simplify and decrease the runtime of the ANSYS analysis. The solder hinge and the fact that the structures would be perpendicular were not modeled in the analysis. This was done for simplification purposes with the assumption that the deformed shape would be the same and this could be added to the analysis at a later point in time if the shape matched the desired deformed shape. Figure 23a shows the ANSYS analysis model used in this

analysis. Although the final device would be fabricated on the micro-scale, the model is 25 mm long and 10 mm tall.

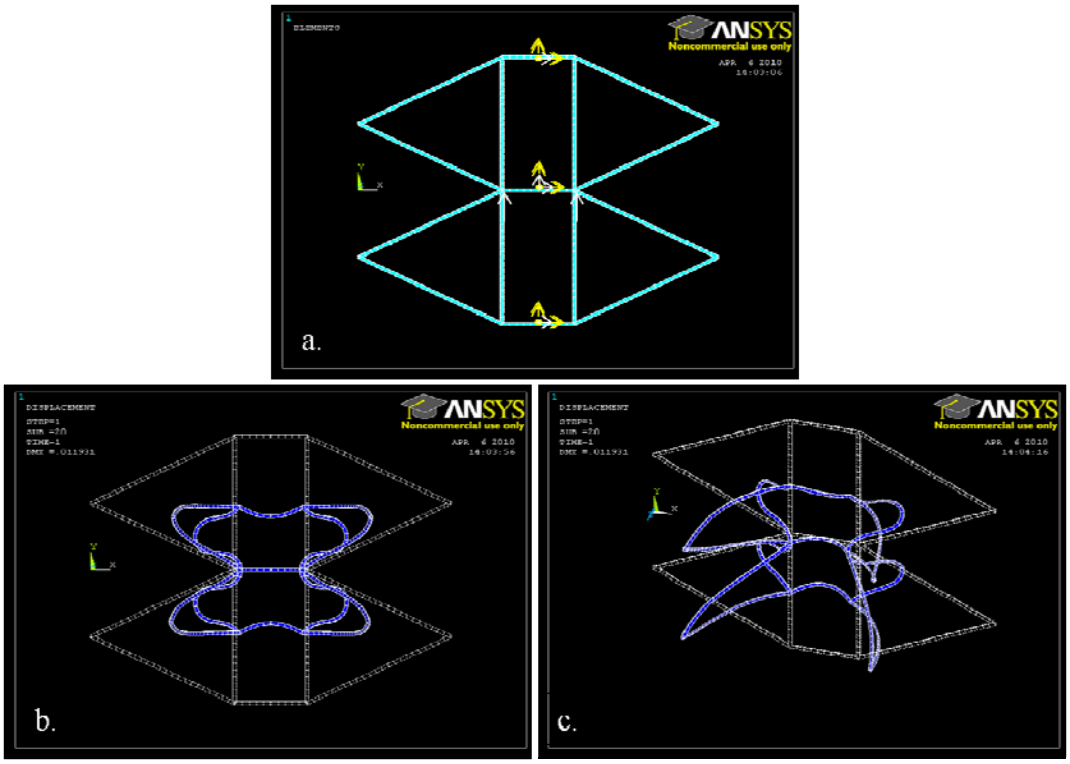

Figure 23. ANSYS analysis of two connected base structures, (a) basic two-dimensional geometry with applied boundary conditions, (b, c) views of deformed shape including lateral buckling

Boundary conditions were applied to the model to approximate the constraints on the actual operating device. The boundary conditions are shown in Figure 23a. The midpoint of the shared horizontal beam was constrained from moving or rotating in all directions to fix the model in space. The points of connection of the vertical beams on the shared horizontal beam were also constrained from moving in the y-direction (up and down). As in the previous analysis of only one base structure, this was done to ensure the vertical beams would buckle. The midpoints of the upper and lower horizontal beams were fixed from rotating in all directions and from moving in the x-direction (left and

right) and the z-direction (in- and out-of-the-page). This was done to ensure only vertical motion of these points. With these boundary conditions, the model was fully constrained and approximated the actual situation.

To emulate the loading situation of the actual device, displacements and loadings were applied to the model. To simulate the force exerted by the accordion-shaped joint mechanism on the outer horizontal beams, a displacement was placed on the midpoint of each of the beams. Both displacements were made in the direction of the center of the beam and were set equal to just under one half of the height of one of the base structures. As in the previous analyses, a small force in the z-direction (out of the page) was also placed at the tip of each of the four triangles to initiate lateral buckling. Unlike in the previous analyses, however, these forces were not removed during the analysis. When the forces were removed, the nonlinear analysis did not converge. The forces are therefore still acting in the final deformed shape of the model but the affects should be negligible due to the extremely small value of the forces. To test this hypothesis the model was run with only these z-direction forces. The resulting deformed shape showed no significant deformation validating this assumption.

2.3.3 Results of Analysis

The analysis of this model once again proved that the base structures could produce a situation of lateral buckling. Figure 23c shows the laterally buckled shape. Figure 23b, however, shows that the triangles would not touch and produce a gripping

mechanism. The vertical beams also show the expected Euler buckling in the form of two fixed ends.

2.3.4 Issues with Model

After the completion of this analysis, it was determined that the model was likely over constrained. It would be difficult, if not impossible, to ensure that the connection points of the joint mechanism would move only in the vertical direction. To test these conditions, the constraints on these points were removed from the model. Without these constraints, the beams rotate and move in all directions, especially the z-direction (Out of the page). When this occurs, the vertical beams curve instead of buckling and the distance between the endpoints is not decreased significantly enough to induce lateral buckling of the triangles. It was therefore necessary to reevaluate the geometry to ensure that lateral buckling would be introduced regardless of the boundary conditions.

There was also a problem with the buckled shape of the triangles when constraints were removed. Instead of buckling inwards to create a gripper, the tip of each triangle pointed outwards. This buckled shape was confirmed by testing physical prototypes made of cardstock. Using these physical prototypes, it was also discovered that the desired buckled shape could be achieved if the arms of the triangle were rotated inwards instead of moving linearly inwards. It was hypothesized that this is the higher energy buckled shape of the model and that it is forced into this position due to the boundary conditions of the model. All of the issues with this model were taken into account and used to develop a new geometry for the next analysis.

2.4 Conclusions from Initial Analyses

The initial analyses detailed in this section provided insight about modeling lateral buckling in ANSYS and the possibility of using this phenomenon in a micro-gripper mechanism. The most significant realization was that the boundary conditions inflicted on the triangle in the concepts 2 and 3 cause the triangles to buckle in a higher energy mode. In order to obtain the correct, lower energy, buckled shape, the constraints on the arms of the triangle must become more flexible to enable the model to buckle in its most natural position. Increasing the degrees of freedom of the triangle should allow the triangle to assume the desired buckled shape.

It was also discovered through this analysis that it is not feasible to use beams as the mechanical element that introduces bistability to this system. The constraints needed for the beams to buckle correctly would be very difficult to obtain in a physical model of this device on the micro-scale. The beams prefer to bend, their lower energy state, instead of buckling in a higher energy state that is indicative of two fixed ends. To obtain buckling, it would need to be ensured that these ends were sufficiently fixed from translating and rotating in all directions except the y-direction. This is not feasible on the micro-scale and, even if this was achieved, it is possible that it would also cause the higher energy state of the buckled triangles.

3. Concept 4: Collapsing Triangle Gripper

After determining that the initial concept was not going to produce the desired gripping action, a new concept was developed – the collapsing triangle. In this geometry, the forces act perpendicular to the triangle arms introducing a moment about the points of the triangle. Through experimentation with physical models made of cardstock, it was shown that rotating the arms inwards produces the correct buckled shape. It was projected that this new geometry would produce a similar situation and allow the triangles to buckle inwards and create the appropriate deformed shape for use in a micro-gripper.

3.1 Geometry

The new geometry is based on the idea of using the accordion-shaped joint mechanism to create a moment about the tip of the triangles and rotate and translate the triangle arms inwards to achieve the correct mode of lateral buckling. Figure 24 shows a diagram of the new geometry.

Figure 24. Sketch of collapsing triangle design geometry

3.1.1 Joint Mechanism

The device contains twelve chemically-actuated joints, four in each of three accordion-shaped joint segments. The joint mechanisms are all attached to the large triangular structure on one end and the small floating triangle on the other. When the joints are activated, they will exert an inwards force on midpoints of each side of the triangular structure. The floating triangle will remain stationary as the sum total force will be zero. If the device is calibrated correctly, the forces applied to the triangular

structure will cause the device to become unstable. At this point, a small perturbation will cause the three points of the triangle to buckle laterally and create a gripper.

3.1.2 Triangular Structure

The large triangular structure and the small crossbars near each point create the collapsing triangle that will buckle laterally and form the shape of a gripper. The crossbars were included as a way to increase the stiffness of the system. The position and/or cross section of the crossbars can be changed to adjust the stiffness of the system as necessary to calibrate the device to buckle at the correct force.

3.2 Analysis

A model was created and analyzed in ANSYS to examine the behavior of the new geometry. To avoid higher energy modes introduced by using displacement boundary conditions in the previous analyses, forces were used in this analysis to simulate the forces created by the joint mechanism on the triangular structure. To simplify the model, the crossbars were given the same cross section as the larger structure even though this would possibly change in the physical device. The model shown in Figure 25a was created using the above assumptions. The model is 2 cm on a side.

Figure 6. ANSYS analysis of collapsing triangular structure, (a) model with applied boundary conditions, (b-d) various views of the deformed shape

The boundary conditions were set to achieve a symmetric shape and approximate the actual constraints as closely as possible. The boundary conditions are shown in Figure 25a. The midpoint of the bottom of the triangle was constrained from moving or rotating in any direction. The midpoints of the other two sides of the triangle were constrained from rotating in any direction or moving in the z-direction (out of the page). With these constraints, the model remained symmetric, converged, and produced the deformed shape predicted by cardstock models. It was assumed that these constraints were reasonable and appropriate.

To imitate the forces exerted by the joint mechanism on the triangular structure, surface forces perpendicular to the structure and pointing inwards were placed on the two elements at the midpoint of each side of the outer triangle. Small forces in the z-direction (out of the page) were also placed on each of the triangle points to initiate lateral buckling. These forces were removed once buckling was initiated and should not affect the final deformed shape of the structure.

3.3 Results of Analysis

The new geometry produced lateral buckling of all three points of the triangle as shown in Figure 25(b-d). The deformed shape, however, is not the required gripper shape. Despite the new geometry, the buckled shape is still not the desired purely inwards buckled shape. The analysis was also conducted with the crossbars removed from the model but the deformed shape remained essentially unchanged, the forces needed to obtain the shape, however, changed as expected.

It was postulated that the model was over-constrained and that this was causing the device not to buckle as desired. To test this theory, the analysis was run with a variety of boundary conditions. All boundary conditions that produced a symmetric model also produced the deformed shape shown in Figure 25. When boundary conditions that did not produce a symmetric model were applied, the model sometimes produced the desired buckle shape.

A cardstock model of the device was once again created to test the buckled shape and the results were inconclusive. The tips of the triangle buckled in all directions indicating that this geometry may not produce a repeatable motion. This could be because the model was not a perfect triangle or because the loading condition was not balanced. The triangles that buckled inwards, the desired buckled shape, were able to achieve this low energy state because the cardstock was flexible enough and the boundary conditions were minimal. The triangles that buckled outwards were too constrained and were subsequently forced to assume a higher energy mode of buckling. This confirmed that the boundary conditions and flexibility were important factors in determining the mode of buckling achieved by the model.

4. Introducing Polymer Sections to the Model

After the previous analyses, a new design which created joints in the model instead of rigid connections was developed. Polymer sections with a modulus of elasticity ten times lower than the rest of the structure were introduced to the system. These sections will decrease the stiffness of the buckling triangles and act as joints in the system. The polymer will allow the rigid sides of the triangular structure to rotate about the tips of the triangle similar to a pinned connection. This should allow the system to buckle in its lowest energy state as buckling theory shows that a beam with both ends pinned will buckle at a lower energy state than a beam with two fixed ends. These joints will also simplify the loading condition and allow the joints to pivot about the tips of the triangle and allow the beam to deform in most natural, lowest energy shape. It is suspected that this is the desired direction for the gripper, as originally seen in the hair clip example.

4.1 Concept 5: Polymer Crossbars

The three cross bars in the collapsing triangle design were changed to a polymer material and the tips of the triangle were removed. The result was a hexagon with three long, rigid sides and three short, polymeric sides. A sketch of this geometry is shown in Figure 26. The analysis of this structure tested the theory of adding the polymer to

decrease joint stiffness and allow the desired buckling shape. This analysis also tested whether the points of the triangle were necessary to achieve lateral buckling.

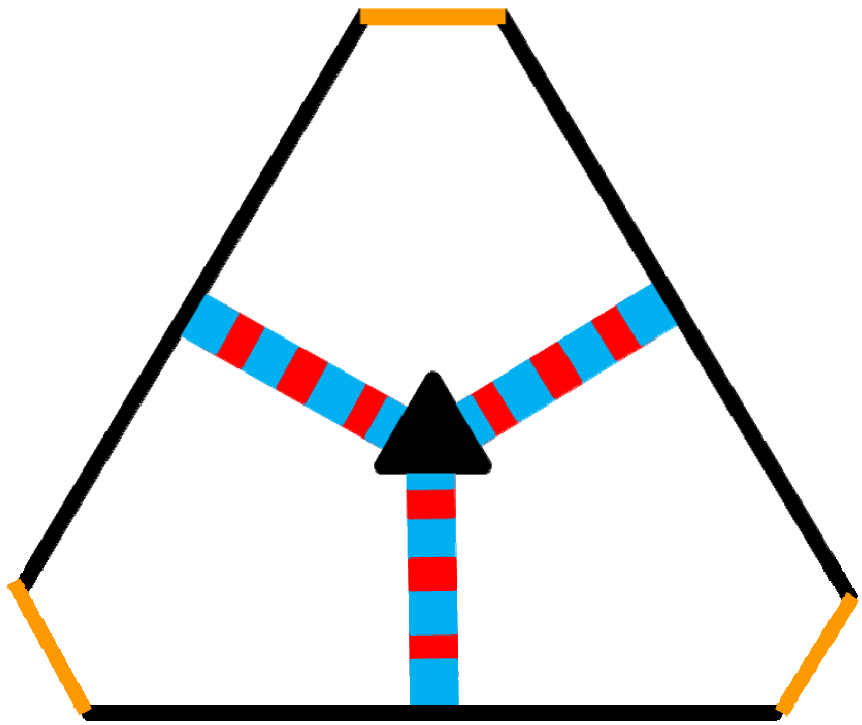

Figure 7. Sketch of collapsing triangle geometry with polymeric crossbars (shown in orange) and no tips of the triangle

4.1.1 Analysis

A model of the collapsing triangle with polymeric crossbars was created and analyzed in ANSYS. The modulus of elasticity of the polymeric sections was set to be ninety percent that of the triangular structure. BEAM4 elements were used for both the triangular structure and the polymer. The model created and the set boundary conditions are shown in Figure 27a.

The forces and boundary conditions applied to the model were largely the same as in the previous analysis. The only significant difference was the positions at which the small z-direction forces to initiate buckling were applied. Since there were no tips of the triangle, these forces were applied at the midpoint of each of the crossbars. The forces applied to the triangular structure which imitate the force exerted by the joint mechanism were decreased to half of the value in the previous analysis. This was necessary to produce a desirable deformed shape with the less stiff structure.

The z-direction (out of the page) forces were also unable to be removed during the analysis as this lead to an unconvergent solution. Their value, however, is extremely small and they should not have any significant affect on the final deformed shape. This assumption was tested by removing the forces to collapse the triangle and performing the analysis with only the z-direction forces applied to the model. In the resultant deformed shape, the tips of the triangle were bent upwards slightly but the model was largely unchanged with displacements one hundred times less than those shown in the buckled case. This verifies that lateral buckling did occur in the analysis. The forces may slightly exaggerate the buckling, but the model was able to buckle laterally with the applied forces and boundary conditions.

Figure 8. ANSYS analysis of collapsing triangular structure with polymeric crossbars and no tips, (a) model with applied forces, (b-d) various views of the deformed shape

4.1.2 Results of Analysis

The analysis showed that the shape would buckle laterally even with the tips removed. The deformed shaped can be seen in Figure 27(b-d). Although this shows the correct mode of lateral buckling, the shape could not be used as a gripper mechanism. The sides of the triangular structure are nearly touching and the device has not buckled enough to close in a gripper shape.

This model, however, was able to more closely approximate the deformed shape. The added polymer sections successfully decreased the joint stiffness and allowed the model to buckle laterally and assume the lower energy buckling mode. The deformed

shape was still not appropriate for a gripping mechanism. This could be a result of the lack of tips on the triangle or from the overall geometry of the device. To make this distinction, the analysis would also be run with the tips of the triangle made of a polymer. This is important for determining if this geometry may suitable for the gripper geometry if polymer sections are added to the model in the correct regions.

4.2 Concept 6: Polymer Triangle Tips

To maintain the benefits of the added polymer sections but gain a more appropriate buckled shape, the tips of the original collapsing triangle structure were made out of the same polymer and this new device was analyzed. The crossbars were also eliminated from the model to further decrease the stiffness of the model and allow the side of the triangle to fully pivot about the tips. Figure 28 shows the new geometry. The portions circled in the figure were replaced by a polymer in this design and analysis. As in the previous analysis, the polymer was given a stiffness ten times lower than that of the rigid structure of the triangle. As stated previously, this analysis will aid in determining whether the polymer or the flattened tips of the triangle were responsible for the lack of complete inwards buckling in the deformed shape of concept 5 – the polymer crossbars.

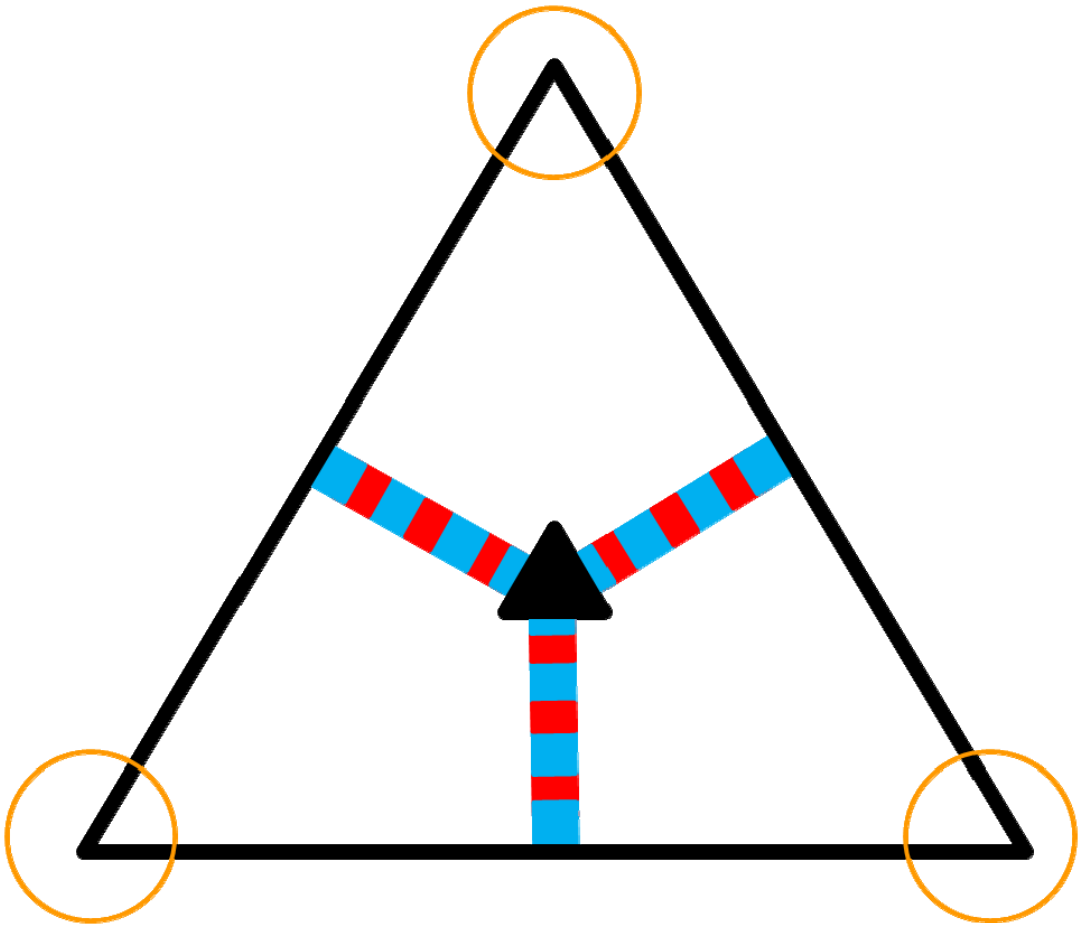

Figure 9. Sketch of collapsing triangle structure with no crossbars and sections to be replaced with a polymer circled

4.2.1 Analysis

A model of the collapsing triangular structure with no crossbars and polymeric tips was made in ANSYS using BEAM4 elements. The same boundary conditions as in the two previous analyses were used. The forces in the z-direction used to initiate buckling were placed on each of the three tips of the triangular structure. Unlike the previous analysis, these forces were removed during the analysis to minimize any effect they may have on the final deformed shape. The forces applied to the triangular structure

to mimic the forces imparted by the joint mechanism were applied in the same position as in the previous analyses but the value was decreased. The decreased stiffness of the structure required these forces to be decreased in order to obtain a reasonable result. The model used in this analysis and the applied forces and boundary conditions is shown in Figure 29.

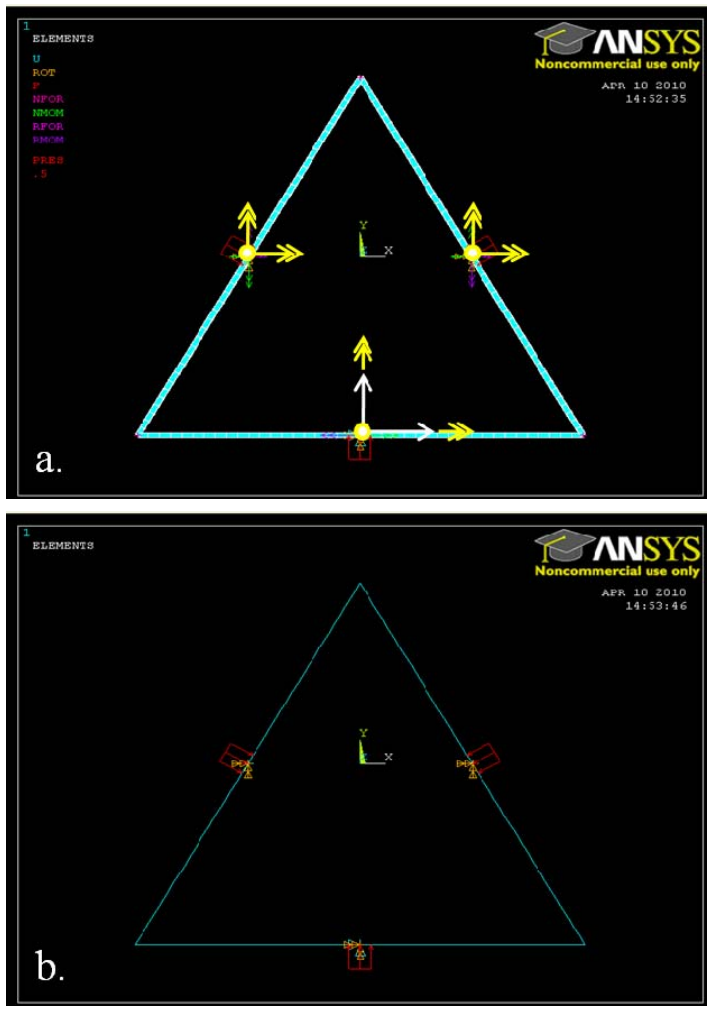

Figure 10. ANSYS model of collapsing triangular structure with no crossbars and polymeric tips, (a) model and set boundary conditions, (b) basic shape with applied forces

4.2.2 Results of Analysis

The results of the ANSYS analysis of the model shown in Figure 29 are shown in Figure 30. After the analysis was conducted a few times, it became apparent that the deformed shape was extremely dependent on the force applied to the triangular structure. To examine this dependence, the deformed shapes with various applied loads have been included in Figure 30.

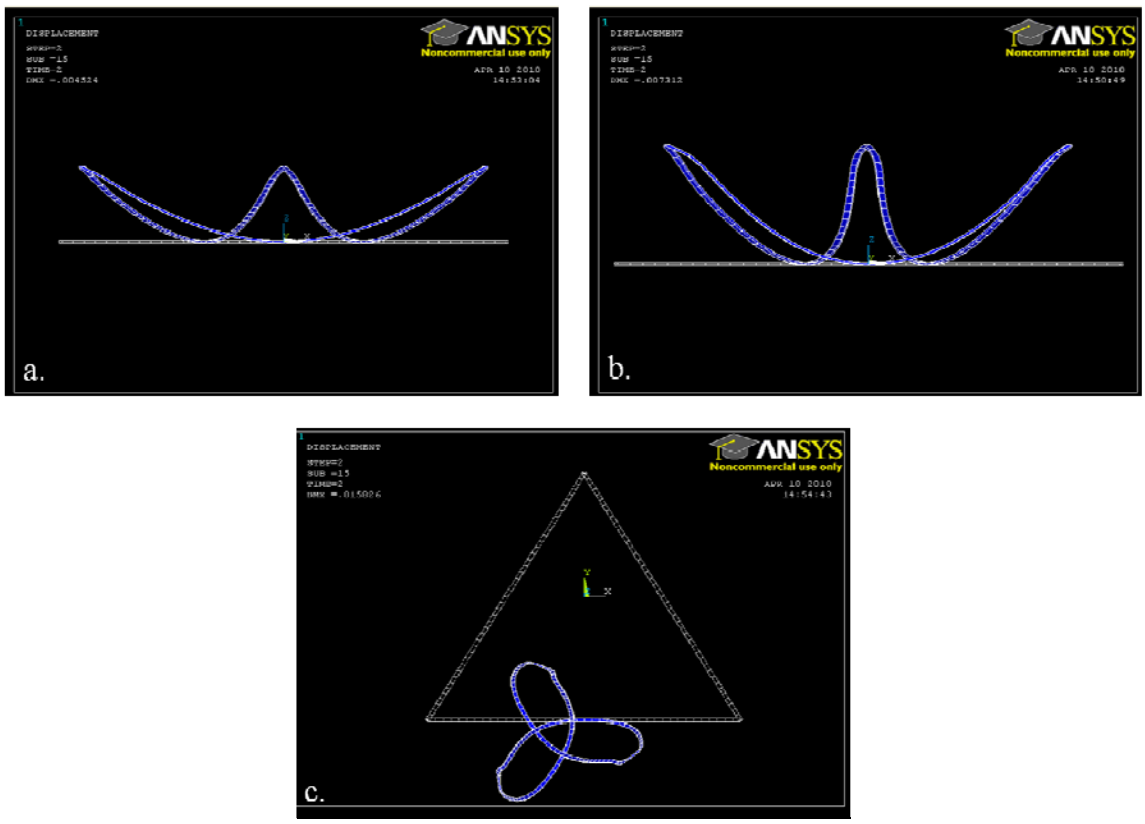

Figure 30. Deformed shape of collapsing triangular structure with no crossbars and polymeric tips with various applied loads of (a) 0.5, (b) 0.75, and (c) 1.0 Pa

The analysis run with an applied pressure loading of 0.5 Pa on each side across two elements (Figure 30a) produced a deformed shape with lateral buckling. The shape

closely resembles the desired buckled shape that could be manipulated for use in a micro-gripper. In this analysis, the triangle was able to buckle in its lowest energy state. The polymeric tips were able to successfully decrease the joint system and allow the model to buckle in its most natural shape. The tips of the device, however, are not buckled far enough to achieve a proper gripping action. This model would either need to be changed to buckle further inwards or work in conjunction with one or more other base devices to form an enclosed gripper. The integration of a few of these base mechanisms to form a micro-gripper is a possibility that should be considered in the future. This would enable the creation of an enclosed mechanism without achieving a complete gripper with lateral buckling.

In an effort to cause the triangles to buckle further inwards, the applied load was increased to 0.75 Pa. The resultant deformed shape is shown in Figure 30b. The device still buckled laterally with the increased loading but the buckled shape is no longer fully inwards. The tips of the triangles are beginning to turn outwards. The model is now buckling in a higher energy mode. This is achievable because the applied load is higher. Further decreasing the joint stiffness by adding more polymer sections may be able to allow the triangle to buckle in its lowest energy mode at higher applied loads. The triangles, however, have buckled farther inwards and are closer to being able to achieve a gripping action. This analysis shows that there is a trade-off between buckling further inwards and obtaining the desired buckled shape.

To test the limits of the model and determine if the buckling trend continued, the applied load was increased further to 1.0 Pa. The results of this analysis are shown in

Figure 30c. At this increased loading, the triangle completely collapses in on itself. This shape is not useful for gripping and does not exhibit any of the desired behavior. This analysis shows that there is a limit to the applied force to produce a useable shape for a gripping mechanism. This appears to be a limit of the geometry.

These three analyses show that it may be possible through the correct combination of stiffness and applied loading to achieve a shape capable of gripping. The lower loading cases each have one of the desired characteristics of the correctly buckled shape and the triangles closing close to the center of the triangle. This analysis shows that this geometry has potential to be used in a micro-gripping mechanism and that it is worth exploring its possibilities in future work.

4.3 Benefits and Issues Arising from Analysis

The analyses of concepts 5 and 6 demonstrated the benefits of adding polymeric sections to the collapsing triangle geometry. It was confirmed that the addition of polymer sections allowed the triangles to buckle in their lowest energy state at small applied loadings. It is possible that this behavior could be achieved at higher applied loadings if the joint stiffness of the system is further decreased. This will need to be explored in future design concepts and analyses.

The analyses also demonstrated that the triangle tips significantly affected the deformed shape of the device. In concept 5, the analysis was completed without the tips of the triangle. Lateral buckling was achieved with this model but the deformed shape

was significantly different and not suitable for gripping action. In concept 6, the model had tips of the triangle and no crossbars. This model also produces lateral buckling and the deformed shape was more suitable for a gripping mechanism. The triangle tips improve the buckling shape of the mechanism and will be beneficial in grasping tissues during use for in vitro procedures.

5. Discussion

This research progresses the use of lateral buckling in micro-scale devices. The analyses done throughout the project consistently resulted in lateral buckling. The buckled shape was not always the desired shape and no geometry was created that will produce the needed behavior, but the basic concept of combining chemically-actuated joints and mechanical components to achieve lateral buckling was shown to be a viable possibility for the use in micro-grippers. The collapsing triangle geometry created and analyzed in this research showed characteristics implicating that, with adjustments, it could be used in a micro-gripper mechanism.

5.1 Energy of Buckled State

One of the major issues encountered was the triangles assuming a higher energy buckled state due to rigid boundary conditions and connections. The future success of this project depends upon finding a design solution that will simplify the boundary conditions and connections to achieve lower energy buckling modes from individual beams. It was shown that the addition of polymer sections to the model could be used to allow the model to buckle in its lowest energy state. This method may prove to be the best method for creating the gripper mechanism.

5.2 ANSYS Modeling

A great deal of insight about the importance of properly constraining the device in the ANSYS model was gained during this work. The ANSYS models could be manipulated in such a way as to produce the required deformed shape. The boundary conditions needed to produce these shapes, however, were often not feasible in an actual mechanism. In future analyses, researchers must be careful to constrain models in such a way as to replicate the behavior of a physical device and not in such a way as to manipulate the model to erroneously produce a proper deformed shape.

5.3 Conclusions from Analyzed Geometries

Analyzing the many different geometries developed throughout the course of this research here provided insight about the benefits and issues associated with the different geometries and mechanical components used to induce instability and snap closure. Table 1 summarizes the six concepts that were developed and analyzed as well as the benefits of each concept and the issues arising from each analysis.

Table 1. Summary of six concepts and benefits and issues arising from each

Concept	Sketch	Benefits	Issues
1. Basic triangle		Demonstrated lateral buckling of a triangular structure	Too simple, toggle difficult to fabricate
2. Vertical beams as trigger	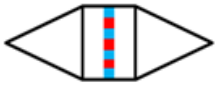	Demonstrated lateral buckling, less sensitive to fabrication	Need to use in conjunction with other device to accomplish gripping
3. Vertical beam base mechanism with solder hinges	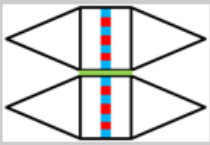	Enclosed gripper geometry	Physical device cannot be constrained to achieve proper deformed shape
4. Collapsing triangle		Lateral buckling achieved	Buckled in higher energy state due to boundary conditions
5. Collapsing triangle with polymer crossbars and no tips	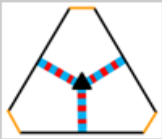	Corners buckled inwards	Deformed shape not appropriate for gripping, to points to grab objects
6. Collapsing triangle with polymer tips and no crossbars	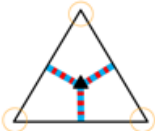	Desired buckled shape at lower applied loadings	Buckles in higher energy state when larger forces are applied

The first mechanical component explored was a toggle mechanism. While the toggle mechanism would be able to provide a snap action when a force was applied, the needed precision in manufacturing and sensitivity of the system were undesirable. The toggle mechanism would be too complicated and would likely close before closing was desirable. In theory, a toggle mechanism would decrease the closing time of the micro-grippers. In practice, this mechanical component is too sensitive and difficult to manufacture to be a viable option.

In the next set of analyses, the toggle mechanism was replaced by a crossbeam. This beam would become unstable when loaded axially and a small perturbation would induce a very quick change to a laterally-buckled shape. The beams proved to be a much more effective mechanical component to use in conjunction with the chemically-actuated joints. The beams would have the desired effect and be much less sensitive to fabrication methods and external forces before chemical actuation. It would be almost impossible to constrain the physical device sufficiently enough to induce Euler buckling in the beams. The beams tend to bend and never achieve the desired buckling behavior. Due to this inability to constrain the physical device, beams are not a viable method of decreasing the closing time of the micro-grippers.

These first analyses and cardstock prototypes of the geometries showed the buckled shape of a triangle was not the desired shape. Instead of buckling fully inwards, the tips of the triangles would begin to turn outwards as the force on the triangle was increased. It had not been anticipated that this was a lower energy mode of buckling of the triangle. It was then discovered from cardstock models that the desired buckled shape could be achieved by rotating the sides of the triangle inwards instead of simply translating the sides towards the middle.

The collapsing triangle design in which a moment is induced about the tips of the triangle was then designed and analyzed. This proved to be a more effective geometry for repeatedly producing the correct buckled shape. Polymer sections were also introduced to the model to achieve the correct mode of lateral buckling. The results of this analysis indicate that this geometry has the greatest potential for decreasing the

closing time of the micro-grippers of all of the geometries analyzed. The analysis produced the correct buckled shape at low applied loadings and provided insight about the affect of the applied load on the deformed shape of the model. There appeared to be a tradeoff between obtaining the correct buckled shape and allowing the tips of the triangle to near the center of the triangle to form a gripper. This is a good base model for use in future versions of this project. Future work will include adjusting this geometry to improve the deformed shape and exploring integrating a few of these base shapes to produce an enclosed gripper.

This research did not produce a final geometry to decrease the closing time of the micro-grippers developed by the Gracias Laboratory; it did, however, provide proof of lateral buckling of triangles, rule out various mechanical components, and examine the most effective way of obtaining the correct buckled shape. This work is a beginning of many design iterations that will be needed to develop a final geometry. The last model analyzed in this research, the collapsing triangular structure, will serve as a starting point for future designs.

6. Future Work

Although the analyses completed during this research provided a great deal of insight into using mechanical components in conjunction with the Gracias Laboratory's chemically-actuated joints, the work is ongoing. There is a need to create a geometry which produces a deformed shape capable of a gripping action and analyze the geometry to prove the proper workings of the system. This work will be completed at Bucknell University by future undergraduate students. There is also a need to fabricate and test the working geometries. This work will be completed at Johns Hopkins University in the Gracias Laboratory.

6.1 Future Work at Bucknell University

This project will be continued by students at Bucknell University in the future in an effort to produce a workable geometry. The future of this project lies in finding a geometry that can be used in a micro-gripper. The collapsing triangular structure was proven to be a good base structure that could, with adjustments, achieve a gripping action. There are a variety of possible changes that could be made to this concept that may produce a more desirable deformed shape. Some of the possible changes are outlined below.

6.1.1 Changes to Be Considered in Future Concepts:

Changing the stiffness of the triangular structure and/or the polymer sections is one possible way of creating a more desirable deformed shape. Based on the completed analyses, the stiffness of the structure has a significant effect on the deformed shape. It may be possible to find a combination of stiffnesses that will produce the required deformed shape. The stiffness could be changed by changing the modulus of elasticity of the material or changing the cross sectional area of the elements.

Another possible change to the structure is to introduce polymer sections where the joint mechanism is attached to the main triangular frame. This would decrease the force needed to move the sides of the triangle inwards. If the sides move further towards the center of the triangle, the gripper may close more fully. This could, however, produce the undesired outward buckling of the tips of the triangle or cause the triangle to completely fold in on itself. When the force from the accordion-shaped joint mechanisms is known, the introduction of these polymer sections could also be used to calibrate the system.

To eliminate the need to produce a certain deformed shape, students could also use a repeated structure format. Determining a way to use one of the deformed shapes already achieved would decrease the amount of future analysis. The issue with this method is creating a geometry that consistently produces an enclosed gripping shape. This is made even more difficult by the need to be able to fabricate the device in two-dimensions. As discussed previously, solder hinges could be used transform a two-dimensional object into a three-dimensional device. This option should be explored with

the current design of a collapsing triangular structure with no crossbars and polymeric tips and with future designs.

Another possible way to produce a device capable of a gripping motion is to change the shape of the main structure. The analyses shown above were all completed on a triangular structure. It is possible, however, that a square, star shape or any polygon would produce a more desirable deformed shape. ANSYS analysis of differing shapes could find a shape that buckles in an appropriate manner.

The above are examples of changes that could be made to the collapsing triangular structure design in an effort to improve the deformed shape and produce a model capable of a gripping action. Other methods may also be needed and will be developed and analyzed at Bucknell University.

6.2 Future Work at Johns Hopkins University

Once a proper geometry has been analyzed and shown to produce the desired buckled shape, the plans will be sent to the Johns Hopkins University for fabrication and testing. The Gracias Laboratory has the technology and knowledge to manufacture devices on a micro- or nano-scale using photolithography. This could not be done using the resources available at Bucknell University. The manufacturing and testing process will be able to be completed relatively quickly and designs will be able to be iterated through rapidly. The laboratory also has the capability to fabricate many of the devices at once. Using this ability, many different devices with varying geometry could be

fabricated and tested at the same time. This will be very useful while calibrating the device to buckle and grip at the correct time. Testing will be conducted on all prototypes to examine the validity of the completed analyses and to observe whether the addition of the mechanical element achieved the desired goal of decreasing the closure time of the grippers.

7. Conclusion

Lateral buckling of a triangle was chosen as the method to decrease the amount of time needed for a micro-gripper to close fully. The chemically-actuated joints will still need to be actuated and close, at least partially, in order for the gripper to close. The actual closing time, however, will be decreased substantially as bistability is introduced to the system. When the joints begin to close, the forces they exert of the designed structure will cause the system to become unstable. At this point, any small perturbation will cause the gripper to snap closed similarly to the snap-action of a Venus flytrap.

The lateral buckling of a triangular structure was first tested and proved to be a viable method for creating a gripping mechanism. This simple triangular structure, however, proved to be too simplified. It was necessary to integrate multiple triangular structures that would laterally buckle in such a way as to achieve a gripping motion.

The use of beams as the toggle device was the first concept developed. This concept utilized a joint mechanism with an accordion-shaped profile. However, this geometry proved very difficult to constrain in order to produce the desired shape. When proper constraints were applied to the system, the buckled shape was not fully inwards and the tips of the triangles pointed outwards. There were also problems with not achieving buckling due to the beams bending instead of buckling. Various attempts were made to refine this geometry leading to the ultimate conclusion that beams were not a viable option for the toggle mechanism.

The next concept was a collapsing triangular structure utilizing multiple joint mechanisms pulling each side of the triangle inwards. A model of this concept was built and analyzed in ANSYS. The analysis of this model showed that the buckled shape was not appropriate for a gripper. The three points of the triangle did buckle laterally towards the center of the triangle. The very tips of the triangle, however, began to turns outwards. This appeared to be a higher energy buckling state of the triangle that was caused due to the applied boundary conditions and connections within the model.

The next set analyzed concepts were collapsing triangular structure where different portions of the triangular structure were made out of a polymer to decrease the joint stiffness of the model. The model was analyzed at various applied forces and proved that lateral buckling could be achieved. It was shown that this geometry may be able to create the required deformed shape if the appropriate changes are made. Due to the decreased joint stiffness, the triangles were able to achieve the lower energy buckled state which is the desired deformed shape of the mechanism.

Future work for this project includes finalizing a structure to produce the desired buckled shape which will be completed at Bucknell University and fabricating and testing of prototypes which will be done at the Gracias Laboratory at Johns Hopkins University. Although there is still a lot of work to do in order to have a working prototype, this research has made a great deal of progress towards minimizing the closing time of a micro-gripper. This research has shown how different geometries can buckle laterally. The completed analyses have also shown some of the common problems with using lateral buckling, especially achieving the proper mode of buckling. The concept of using

lateral buckling on a micro-scale was also proven possible through this work and will be further verified when prototypes are fabricated.

References

[1] Gracias Laboratory, http://www.jhu.edu/chembe/gracias/index.html.

[2] Randhawa, J.S., Keung, M.D., Tyagi, P., and Gracias, D.H., 2010, "Reversible Actuation of Microstructures by Surface-Chemical Modification of Thin-Film Bilayers," *Advanced Materials*, **22**, pp. 407-10.

[3] Randhawa, J.S., Leong, T.G., Bassik, N., Benson, R.R., Jochmans, M.T., and Gracias, D.H., 2008, "Pick-and-Place Using Chemically Actuated Microgrippers," *Journal of the American Chemical Society*, Vol. **130** No. 51, pp. 17238-9.

[4] Leong, T.G., Randall, C.L., Benson, B.R., Bassik, N., Stern, G.M. and Gracias, D.H., 2009, "Tetherless Thermobiochemically Actuated Microgrippers," *National Academy of Sciences of the United States of America*, Vol. **106** No.3, pp. 703-8.

[5] Bassik, N., Stern, G.M., and Gracias, D.H., 2009, "Microassembly Based on Hands Free Origami with Bidirectional Curvature," *Applied Physics Letters*, Vol. **95** Issue 9, online.

[6] Randall, C.L., Leong, T.G., Bassik, N. and Gracias, D.H., 2007, "3D Lithographically Fabricated Nanoliter Containers for Drug Delivery," *Advanced Drug Delivery Reviews*, Vol. **59** Issue 15, pp. 1547-61.

[7] Azam, A., Leong, T.G., Zarafshar, A.M. and Gracias, D.H., 2009, "Compactness Determines the Success of Cube and Octahedron Self-Assembly," *PLoS ONE*, **4**, online.

[8] Leong, T.G., Randall, C.L., Benson, B.R., Zarafshar, A.M. and Gracias, D.H., 2008, "Self-loading Lithographically Structured Microcontainers: 3D Patterned, Mobile Microwells," *Lab on a Chip*, **8**, pp. 1621-4.

[9] Fernandes, R. and Gracias, D.H., 2009, "Toward a Miniaturized Mechanical Surgeon," *Materials Today*, Vol. **12** No.10, pp. 14-20.

[10] Bassik, N., Abebe, B.T. and Gracias, D.H., 2008, "Solvent Driven Motion of Lithographically Fabricated Gels," *Journal of the American Chemical Society*, **24**, pp. 12158-63.

[11] Cho, J.H., Hu, S., and Gracias, D.H., 2008, "Self-Assembly of Orthogonal Three-Axis Sensors," *Applied Physics Letters*, Vol. **93** Issue 4, online.

[12] Leong, T.G., Lester, P.A., Koh, T.L., Call, E.K., and Gracias, D.H., 2007, "Surface Tension-Driven Self-Folding Polyhedra," *Langmuir*, **23**, pp. 8747-51.

[13] Opdahl, P.G., Jensen, B.D., and Howell, L.L, 1998, "An Investigation into Compliant Bistable Mechanisms," *Proc. of 1998 ASME Design Engineering Technical Conferences*, pp. 1-10.

[14] Jensen, B.D., 1998, "Identification of Macro- and Micro- Compliant Mechanism Configurations Resulting in Bistable Behavior," Masters Thesis, Brigham Young University, Provo, UT.

[15] Tsay, J., Chang, H.A., and Sung, C.K., 2005, "Design and Experiments of Fully Compliant Bistable Mechanisms," *Mechanism and Machine Theory*, **40**, pp. 17-31.

[16] Qui, J., Lang, J.H., and Solcum, A.H., 2004, "A Curved-Beam Bistable Mechanism," *Journal of Microelectromechanical Systems*, Vol. **13** No. 2, pp. 137-46.

[17] Ishii, H. and Ting, K.L., 2004, "SMA Actuated Compliant Bistable Mechanisms," *Journal of Mechatronics*, **14**, pp. 421-37.

[18] Tsay, J., Su, L.Q., Sung, C.K., 2005, "Design of a linear micro-feeding system featuring bistable mechanisms," *Journal of Micromechanics and Microengineering*, **15**, pp. 63-70.

[19] Beer, F.P., Johnston, E.R., DeWolf, J.T., and Mazurek, D.F., 2009, *Mechanics of Materials: Fifth Edition*, McGraw Hill, Boston, MA, Ch. 10.

[20] Timoshenko, S.P. and Gere, J.M., 1961, *Theory of Elastic Stability: Second Edition*, Dover Publications, Mineola, NY, Ch. 6.

[21] Sclater, N. and Chironis, N.P., 2007, *Mechanisms and Mechanical Devices Sourcebook*, McGraw Hill, New York, NY.

[22] Goody, Inc., http://www.goody.com/.

[23] Fish, J. and Belytschko, T., 2007, *A First Course in Finite Elements*, Wiley, West Sussex, England, Ch. 4.